BIXOLON®
SAMSUNG mini printers

SAMSUNG

Command Manual
SRP-275

Impact Printer
Rev. 1.02

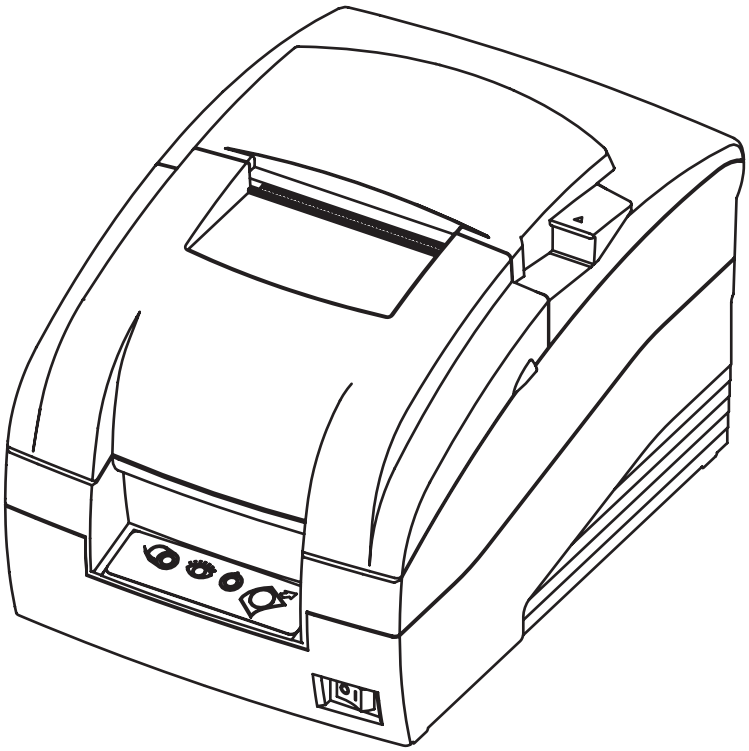

http://www.samsungminiprinters.com

1. EPSON mode (TM-U220)

n	Command	Description	Hex
1	HT	Horizontal tab	09
2	LF	Print and line feed	0A
3	CR	Print and carriage return	0D
4	DLE EOT	Real-time status transmission	10 04
5	DLE ENQ	Real-time request to printer	10 05
6	DLE DC4(fn = 1)	Generate pulse at real-time	10 14
7	ESC SP	Set right-side character spacing	1B 20
8	ESC !	Select print mode(s)	1B 21
9	ESC %	Select/cancel user-defined character set	1B 25
10	ESC &	Define user-defined characters	1B 26
11	ESC *	Select bit-image mode	1B 2A
12	ESC –	Turn underline mode on/off	1B 2D
13	ESC 2	Select default line spacing	1B 32
14	ESC 3	Set line spacing	1B 33
15	ESC <	Return home	1B 3C
16	ESC =	Select peripheral device	1B 3D
17	ESC ?	Cancel user-defined characters	1B 3F
18	ESC @	Initialize printer	1B 40
19	ESC D	Set horizontal tab positions	1B 44
20	ESC E	Turn emphasized mode on/off	1B 45
21	ESC G	Turn double-strike mode on/off	1B 47
22	ESC J	Print and feed paper	1B 4A
23	ESC K	Print and reverse feed	1B 4B
24	ESC M	Select character font	1B 4D
25	ESC R	Select an international character set	1B 52
26	ESC R S	Select an international character set , Save NVmemory	1B 52 53
27	ESC U	Turn unidirectional printing mode on/off	1B 55
28	ESC a	Select justification	1B 61
29	ESC c 3	Select paper sensor(s) to output paper end signals	1B 63 33
30	ESC c 4	Select paper sensor(s) to stop printing	1B 63 34
31	ESC c 5	Enable/disable panel buttons	1B 63 35
32	ESC d	Print and feed ***n*** lines	1B 64
33	ESC e	Print and reverse feed ***n*** lines	1B 65
34	ESC i	Partial cut (one point left uncut)	1B 69
35	ESC m	Partial cut (one point left uncut)	1B 6D
36	ESC p	Generate pulse	1B 70
37	ESC r	Select print color	1B 72
38	ESC t	Select character code table	1B 74
39	ESC u	Transmit peripheral device status	1B 75
40	ESC v	Transmit paper sensor status	1B 76
41	ESC {	Turn upside-down printing mode on/off	1B 7B
42	ESC g<0>	Start macro record (For logo)	1B 67 00
43	ESC g<n>	Execute macro (For logo)	1B 67 <n>
44	FS !	Set print mode(s) for Kanji characters **(for China)**	1C 21
45	FS &	Select Kanji character mode **(for China)**	1C 26
46	FS -	Turn underline mode on/off for Kanji characters **(for China)**	1C 2D
47	FS .	Cancel Kanji character mode **(for China)**	1c 2E
48	FS 2	Define user-defined Kanji characters **(for China)**	1C 32
49	FS p	Print NV bit image	1C 70
50	FS q	Define NV bit image	1C 71
51	FS S	Set Kanji character spacing **(for China)**	1C 53
52	FS W	Turn quadruple-size mode on/off for Kanji characters **(for China)**	1C 57
53	FS ?	Cancel user-defined Kanji characters **(for China)**	1C 3F
54	GS (A	Execute test print	1D 28 41
55	GS (C	Edit NV user memory	1D 28 43
56	GS (D	Enable/disable real-time command	1D 28 44
57	GS (E	User setup commands	1D 28 45
58	GS I	Transmit printer ID	1D 49
59	GS V	Select cut mode and cut paper	1D 56
60	GS a	Enable/disable Automatic Status Back (ASB)	1D 61
61	GS r	Transmit status	1D 72

2. STAR mode (SP500)

n	Command	Description	Hex
1	ESC GS t	Specify code page	1B 1D 74
2	ESC R	Specify international character set	1B 52
3	ESC /	Specify/cancel slash zero	1B 2F
4	ESC M	Specify 7×9 font (half dots)	1B 4D
5	ESC P	Specify 9×9 font	1B 50
6	ESC :	Specify 5×9 font (3P-1)	1B 3A
7	ESC SP	Specify character space	1B 20
8	SO	Specify double-wide expanded characters	0E
9	DC4	Cancel double wide printing	14
10	ESC W	Specify/cancel double-wide printing	1B 57
11	ESC h	Specify/cancel double-high printing	1B 68
12	ESC E	Select emphasized printing	1B 45
13	ESC F	Cancel emphasized printing	1B 46
14	ESC -	Select/cancels underline mode	1B 2D
15	ESC _	Select/cancels upperline mode	1B 5F
16	ESC 4	Specify white/black inversion and red color printing	1B 34
17	ESC 5	Cancel white/black inversion and specify black color printing	1B 35
18	SI	Select upside-down printing	0F
19	DC2	Cancel upside-down printing	12
20	ESC RS i	Specify/cancel rotating print mode	1B 1E 69
21	LF	Line feed	0A
22	CR	Line feed (according to Memory Switch settings)	0D
23	ESC a	Feed paper n lines	1B 61
24	ESC 0	Set line feed to 1/8 inch	1B 30
25	ESC 1	Set line feed to 7/72 inch	1B 31
26	ESC z 0("0")	Set line feed to 1/12 inch	1B 7A 00(30)
27	ESC z 1("1")	Set line feed to 1/6 inch	1B 7A 01(31)
28	ESC J	Execute n/72 inch paper feed one time	1B 4A
29	ESC A	Define n/72 inch pitch line feed	1B 41
30	ESC 2	Set ESC A line feed pitch	1B
31	ESC 3	Set line feed to n/216 inch line feed pitch (approximate value)	1B 33
32	ESC y	Set line feed to n/144 inch line feed pitch	1B 79
33	ESC I	Execute n/144 inch paper feed one time	1B 49
34	FF	Form feed	0C
35	ESC C	Set page length to n lines	1B 43
36	ESC C 0	Set page length to n inches	1B 43 00
37	VT	Feed paper to vertical table position	0B
38	ESC B	Set vertical tab position	1B 42
39	ESC N	Set bottom margin to n lines	1B 4E
40	ESC O	Cancel bottom margin	1B 4F
41	ESC l	Set left margin	1B 6C
42	ESC Q	Set right margin	1B 51
43	HT	Move print position to horizontal tab position	09
44	ESC D	Set/cancel horizontal tab position	1B 44
45	ESC GS a	Specify position alignment	1B 1D 61
46	ESC GS A	Specify absolute position	1B 1D 41
47	ESC GS R	Specify relative position	1B 1D 52
48	ESC &	Register/delete download characters	1B 26
49	ESC %	Set/cancel download characters	1B 25
50	ESC K	Standard density bit image	1B 4B

n	Command	Description	Hex
51	ESC L	Double density bit image	1B 4C
52	ESC d	Paper cut instruction	1B 64
53	ESC BEL	Set pulse width for external device drive	1B 07
54	BEL	External device 1 drive instruction	07
55	FS	External device 1 drive instruction (real time)	1C
56	SUB	External device 2 drive instruction (real time)	1A
57	EM	External device 2 drive instruction (real time)	19
58	ENQ	Inquire ENQ status	05
59	EOT	Inquire EOT status	04
60	ESC ACK SOH	Inquire status	1B 06 01
61	ESC RS a	Set status transmission conditions	1B 1E 61
62	ETB	Update ETB status (check after printing)	17
63	ESC RS E	Clear the ETB counter and ETB status	1B 1E 45
64	DC3	Printer deselect	13
65	DC1	Printer select	11
66	ESC @	Command initialization	1B 40
67	ESC U	Select printing direction	1B 55
68	ESC GS #	Set Memory Switch	1B 1D 23
69	ESC #	Set Memory Switch	1B 23
70	ESC ? LF NUL	Reset printer and test print	1B 3F 0A 00

3. CITIZEN mode (iDP3550/3551)

n	Command	Description	Hexadecimal
1	FF n	n-line paper feed (CBM1 mode)	0C n
2	FF	Form feed (CBM2 mode)	0C
3	SO (Note)	Specifying the double width character (CBM1 mode)	0E
4	SI (Note)	Canceling the double width character	0F
5	LF	Print and paper feed	0A
6	CR	Printing	0D
7	DC1 (Note)	Initializing the printer (CBM1 mode)	11
8	DC2 (Note)	Specifying/Canceling the inverted character (CBM1 mode)	12
9	DC3 (Note)	Specifying the red print (CBM1 mode)	13
10	CAN	Canceling the print data	18
11	ESC * n1 n2	Specifying the bit image mode	1B 2A n1 n2
12	ESC - n	Specifying/Canceling the Underline	1B 2D n
13	ESC 1	Specifying 1/9-inch line feed width	1B 31H
14	ESC 2	Specifying 2/9-inch line feed width	1B 32
15	ESC 3	Specifying standard line feed width	1B 33
16	ESC C n	Setting the page length	1B 43 n
17	ESC N n	Specifying the perforation skip	1B 4E n
18	ESC O	Canceling the perforation skip	1B 4F
19	ESC f 1	Form feed (Changing the page)	1B 66 01
20	ESC t n	Selecting the character code table	1B 74 n
21	ESC BEL n1 n2	Setting the external device drive pulse width	1B 07 n1 n2
22	BEL	Driving command A for Drawer-1	07
23	FS	Driving command B for Drawer-1	1C
24	SUB	Driving command for Drawer-2	1A
25	RS	Buzzer-on/Enhanced character designation. The designation is released with US code or line feed (CBM mode)	1E
26	ESC P 0	Partial cut	1B 50 00
27	ESC P 1	Partial cut	1B 50 01
28	ESC R n	Selecting the international character set	1B 52 n
29	ESC & 0 n1 n2	Defining the download character set	1B 26 00 n1 n2
30	ESC % n	Specifying/Canceling the download character	1B 25 n
31	ESC / n	Defining the message	1B 2F n
32	ESC DC3 n	Printing the message	1B 13 n
33	ESC y n	Setting the print lines after paper near end detection	1B 79 n
34	ESC DC2 n1 n2	Deleting the download character, message, bit image	1B 12 n1 n2
35	GS * n1 n2	Defining the download bit image	1D 2A n1 n2
36	GS / m	Printing the download bit image	1D 2F m
37	US	Standard character designation (CBM2 mode)	1F

NOTE
Effective when CBM mode is selected with the DIP Switch segments 1-1 and 1-2 and CMB1 (OFF) is selected with the DIP Switch segment 1-4. If CBM2 (ON) is selected with the DIP Switch segment 1-4, the functions of these commands are changed as shown in the table below.

• CBM2 Mode

Command	Code	Function	
		8-bit data selected	7-bit data selected
SO	0E	Specifying the double width character	Specifying the shift-out side character
SI	0F	Canceling the double width character	Specifying the shift-in side character

Command	Code	Function
DC1	11	Selecting the printer
DC2	12	Specifying the red print
DC3	13	Deselecting the printer
ESC “C” n	1B 43 n	Setting the page length

4. Control Commands Details

4-1 Command Notation

XXXX

[Name]	The name of the command.
[Format]	The code sequence.
[Range]	Gives the allowable ranges for the arguments.
[Description]	Describes the command's function.
[Notes]	Provides important information on setting and using the printer command, if necessary. Item(s) marked with * indicates "important notice".
[Default]	Gives the default values (if any) for the command arguments.
[Reference]	Lists related commands.

ASCII indicates the ASCII equivalents.

Hex indicates the hexadecimal equivalents.

Decimal indicates the decimal equivalents.

[ ] ***k*** indicates the contents of the [ ] should be repeated ***k*** times.

4-2 Explanation of Term

Item	Description
Reception buffer	The reception buffer is a buffer that stores, as is, the data received from the host (the reception data). The reception data is stored in the reception buffer temporarily, and is then processed sequentially.
Print buffer	The print buffer is a buffer that stores the image data to be printed.
Print buffer full	This is the state where the print buffer is full. If new print data is input while the print buffer is full, the data in the print buffer is printed out and a line feed is executed. This is the same operation as the LF operation.
Start of line	The start of line state satisfies the following condition: There is no print data (including spaces and portions of data skipped due to HT) currently in the print buffer.
Printable area	The maximum range within which printing is possible under the printer specifications.
Inch	A unit of length. One inch is 25.4mm.
MSB	Most Significant Bit
LSB	Least Significant Bit

4-3 Exception processing

• Undefined codes

This term refers to the codes ranging from 00H to 1FH in the character code table. If a code in this range that is not defined as a command is input, that code (one byte) is read in and discarded, and subsequent data is processed as normal data.

Example : 30H, 31H, 03H, 32H, 0AH, 33H
If the above data string is input, the printer reads in and discards "03H" as an undefined code.
Note that 0AH is defined as a command (**LF**). As a result, the data string that is actually processed is: 30H, 31H, 32H, 0AH, 33H

• Undefined commands

If the data following **ESC** (1BH) or **GS** (1DH) is not defined as a command, then the two bytes (**ESC**/**GS** and the code that follows) are read in and discarded.

Example : 30H, 1BH, 22H, 31H, 32H
If the above data string is input, the printer discards the data 1BH and 22H as undefined commands.
As a result, the data string that is actually processed is: 30H, 31H, 32H

• Settings outside the defined range

If a value outside of the defined range is input for a command that takes parameters, that command is ignored and the previous value for that setting remains unchanged. In the case of a command that takes multiple parameters, command processing is halted the moment that a value outside of the defined range is input and subsequent values are processed as normal data.

Example : 1BH, 52H, 15H
If the above data string is input, 1BH and 52H are defined as a command (**ESC R**), but the parameter 15H is outside of the defined range. As a result, the printer reads in and discards the data string 1BH, 52H, 15H. Accordingly, the previously set international character set is not changed.

4-4 Control Commands Details

4-4-1 EPSON mode (TM-U220) Details

HT

[Name] Horizontal tab

[Format] ASCII HT
Hex 09
Decimal 9

[Range] None

[Default] None

[Description] Moves the printing position to the next horizontal tab.

[Notes]
- This command is ignored unless the next horizontal tab position has been set.
- Horizontal tab positions are set by **ESC D**.
- If the next horizontal tab position exceeds the printing area, the printer sets the printing position to [Printing area width + 1].
- When underline mode is turned on, the underline will not be printed under the tab space skipped by this command.

LF

[Name] Print and line feed

[Format] ASCII LF
Hex 0A
Decimal 10

[Range] None

[Default] None

[Description] Prints the data in the print buffer and feeds one line.

[Notes]
- The amount of paper fed per line is based on the value set using the line spacing command (**ESC 2** or **ESC 3**).
- After printing, the printing position moves to the beginning of the line.

CR

[Name] Print and carriage return

[Format] ASCII CR
Hex 0D
Decimal 13

[Range] None

[Default] None

[Description]

When auto line feed is enabled(DSW 2-1) (Only available with Parallel Interface)	When auto line feed is disabled
Executes printing and one line feed as **LF**	Prints data in print buffer and does not feed the paper

[Notes]
- With a serial interface, the command performs as if auto line feed is disabled.
- With a parallel interface, enabling or disabling the auto line feed can be selected by the DIP Switch (DSW2-1).
- After printing, the printing position moves to the beginning of the line.

DLE EOT

[Name] Real-time status transmission

[Format]

ASCII	DLE	EOT	***n***
Hex	10	04	***n***
Decimal	16	4	***n***

[Range] 1 ≤ ***n*** ≤ 4

[Description] Transmits 1 byte of status data specified in real time, using *n* as follows:

n	**Function**
1	Transmit printer status
2	Transmit offline status
3	Transmit error status
4	Transmit paper sensor status

[Notes]

- This is a real-time command that the printer executes upon receiving it. Take the following into consideration:
  - If this command interrupts the code string of another command, this command is processed as a parameter of the other command; therefore, the print result will not be correct.
  - If a command such as bit-image or defined data has a code string that is the same as a code string in a parameter, the printer processes and then continues with the bit-image or other command.
- With a serial interface model, this command is executed even when the printer is offline, the receive buffer is full, or an error occurs.
- With a parallel interface model, this command is not executed in the following conditions, because the printer is busy and unable to receive data from the host computer. The busy condition is set by DIP Switch (DSW1-4).
  - Receive buffer is full when DIP Switch (DSW1-4) is set to On.
  - Printer is offline, an error occurs, or receive buffer is full when DIP Switch (DSW1-4) is set to Off.
- This command can be used when the printer is disabled by **ESC =**.
- Each status equals 1 byte.
- Printer status (***n*** = 1) is as follows:

Bit	Binary	Hex	Decimal	Status
0	0	00	0.	Not used. Fixed to Off
1	1	02	2	Not used. Fixed to On
2	0	00	0	Drawer kick-out connector pin 3 is LOW
	1	04	4	Drawer kick-out connector pin 3 is HIGH
3	0	00	0	Online
	1	08	8	Offline
4	1	10	16	Not used. Fixed to On
5	0	00	0	Not used. Fixed to Off
6	0	00	0	Not used. Fixed to Off
7	0	00	0	Not used. Fixed to Off

- Offline status (***n*** = 2) is as follows:

Bit	Binary	Hex	Decimal	Status
0	0	00	0.	Not used. Fixed to Off
1	1	02	2	Not used. Fixed to On
2	0	00	0	Cover is closed
	1	04	4	Cover is open
3	0	00	0	Paper is not being fed by the paper feed button
	1	08	8	Paper is being fed by the paper feed button
4	1	10	16	Not used. Fixed to On
5	0	00	0	No paper end stop
	1	20	32	Printing stops due to a paper end
6	0	00	0	No error
	1	04	4	Error occurred
7	0	00	0	Not used. Fixed to Off

• Error status (***n*** = 3) is as follows:

Bit	Binary	Hex	Decimal	Status
0	0	00	0	Not used. Fixed to Off
1	1	02	2	Not used. Fixed to On
2	0	00	0	No mechanical error
	1	04	4	Mechanical error occurred
3	0	00	0	No auto cutter error
	1	08	8	Autocutter error occurred
4	1	10	16	Not used. Fixed to On
5	0	00	0	No unrecoverable error
	1	20	32	Unrecoverable error occurred
6	0	00	0	No auto-recoverable error
	1	04	4	Auto-recoverable error occurred
7	0	00	0	Not used. Fixed to Off

- If mechanical error (bit 2) or auto cutter error (bit 3) occurs due to paper jams or the like, it is possible to recover by correcting the cause of the error and executing **DLE ENQ**.
- If an unrecoverable error (bit 5) occurs, turn off the power as soon as possible.

• Paper sensor status (***n*** = 4) is as follows:

Bit	Binary	Hex	Decimal	Status
0	0	00	0	Not used. Fixed to Off
1	1	02	2	Not used. Fixed to On
2,3	00	00	0	Paper near end sensor: paper adequate
	11	0C	12	Paper near end sensor: paper near end
4	1	10	16	Not used. Fixed to On
5,6	00	00	0	Paper end sensor: paper present
	11	60	96	Paper end sensor: paper not present
7	0	00	0	Not used. Fixed to Off

DLE ENQ

[Name] Real-time request to printer

[Format]

ASCII	DLE	ENQ	***n***
Hex	10	05	***n***
Decimal	16	5	***n***

[Range] ***n*** = 2

[Default] None

[Description] Recovers from an error after clearing the receive and print buffers.

[Notes]

• This is a real-time command that the printer executes upon receiving it. Note the following when using this command.
  - If this command is embedded within the code string of another command, it is processed as a parameter of the other command, and the print result is not correct.
  - If another command (such as bit image or defined data) has a code string in a parameter that is the same as this command, the printer starts processing this command.
• **DLE ENQ 2** is enabled when a recoverable error occurs with the exception of an automatically recoverable error, and is ignored in other cases.
• With a serial interface model, this command is executed even when the printer is offline or the receive buffer is full.
• With a parallel interface model, this command is not executed in the following conditions, because the printer is busy and unable to receive data from the host computer. The busy condition is set by DIP Switch (DSW1-4).
  - Receive buffer is full when DIP Switch (DSW1-4) is set to On.
  - Printer is offline, an error occurs, or receive buffer is full when DIP Switch (DSW1-4) is set to Off.
• When a recoverable error occurs, after removing the cause of the error, the printer can recover from the error by transmitting **DLE ENQ 2** without the printer being turned off.
• **DLE ENQ 2** is also executed to recover from a recoverable error when the printer is disabled by **ESC =.**
• After processing **DLE ENQ 2**, the printing position is moved to the left side of the printable area. Printer is in the status "beginning of the line," or "there is data in the print buffer."
• This command is disabled while sending the block data "Header ~ NUL."

DLE DC4 (*fn* = 1)

[Name] Generate pulse at real-time

[Format]

ASCII	DLE	DC4	***n m t***
Hex	10	14	***n m t***
Decimal	16	20	***n m t***

[Range]
n = 1
m = 0, 1
1 ≤ ***t*** ≤ 8

[Description] Outputs the pulse specified by ***t*** to connector pin ***m*** as follows in real time:

m	Connector pin
0	Drawer kick-out connector pin 2
1	Drawer kick-out connector pin 5

The pulse ON time is [***t*** x100 ms] and the OFF time is [***t*** x100 ms]

[Notes]
- This is a real-time command that the printer executes upon receiving it. Note the following when using this command.
  - If this command is embedded within the code string of another command, it is processed as a parameter of the other command, and the print result is not correct.
  - If another command (such as bit image or defined data) has a code string in a parameter that is the same as this command, the printer starts processing this command.
- This command is ignored in the following states:
  - In error status
  - When the pulse is being output to the connector pin (during processing of **ESC p** and **DLE DC4**)
  - During transmission of block data (Header ~ NUL)
  - When this command is disabled by **GS (D**

ESC SP

[Name] Set right-side character spacing

[Format]

ASCII	ESC	SP	**n**
Hex	1B	20	**n**
Decimal	27	32	**n**

[Range] 0 ≤ **n** ≤ 255

[Default] **n** = 0

[Description] Sets the right-side character spacing to ***n*** x (horizontal or vertical motion unit).

[Notes]
- When characters are enlarged, the character spacing is ***n*** times normal value. The character spacing for double-width mode is twice the normal value.

ESC !

[Name] Select print mode(s)

[Format]

ASCII	ESC	!	***n***
Hex	1B	21	***n***
Decimal	27	33	***n***

[Range] 0 ≤ ***n*** ≤ 255

[Default] ***n*** = 1

[Description] Selects or cancels print modes collectively (emphasized, double-height, double-width, underline) using ***n*** as follows:

Bit	Off/On	Hex	Decimal	Function
0	Off	00		Character font A(9x9)selected
	On	01		Character font B(7x9) selected
1,2	-	-	-	Undefined
3	Off	00	0	Emphasized mode not selected
	On	08	8	Emphasized mode selected
4	Off	00	0	Double-height mode not selected
	On	10	16	Double-height mode selected
5	Off	00	0	Double-width mode not selected
	On	20	32	Double-width mode selected
6	Off	-	-	Undefined
7	Off	00	0	Underline mode not selected
	On	80	128	Underline mode selected

[Notes]
- Functions for each bit can also be executed by the following commands:
  - Bit 0 (character font): **ESC M**
  - Bit 3 (Emphasized mode): **ESC E**
  - Bit 7 (underline mode): **ESC –**
- When some characters in a line are double-height, all characters on the line are aligned at the baseline.
- When double-width mode is turned on, the characters are enlarged to the right, based on the left side of the character.
- When both double-height and double-width modes are turned on, quadruple size characters are printed.
- The character is enlarged in the paper feed direction when double-height mode is selected, and it is enlarged perpendicular to the paper feed direction when double-width mode is selected.
- The underline thickness is that specified by **ESC –**, regardless of the character size. The underline is the same color as the printed character.
- The printer cannot underline the space set by **HT**.

ESC %

[Name] Select/cancel user-defined character set

[Format]

ASCII	ESC	%	***n***
Hex	1B	25	***n***
Decimal	27	37	***n***

[Range] 0 ≤ ***n*** ≤ 255

[Default] ***n*** = 0

[Description] Selects or cancels the user-defined character set.
- When the LSB of ***n*** is 0, the user-defined character set is canceled.
- When the LSB of ***n*** is 1, the user-defined character set is selected.

[Notes]
- When the user-defined character set is canceled, the resident character set is automatically selected.
- Settings of this command are effective until **ESC @** is executed, the printer is reset, or the power is turned off.

ESC &

[Name] Define user-defined characters

[Format]

ASCII	ESC	&	***y c1 c2 [x1 d1 … d(y x x1)]… [xk d1 … d(y x xk)]***
Hex	1B	26	***y c1 c2 [x1 d1 … d(y x x1)]… [xk d1 … d(y x xk)]***
Decimal	27	38	***y c1 c2 [x1 d1 … d(y x x1)]… [xk d1 … d(y x xk)]***

[Range]
y = 2
32 ≤ ***c1*** ≤ ***c2*** ≤ 126
0 ≤ ***x*** ≤ 12 (Font A (9 x 9))
0 ≤ ***x*** ≤ 10 (Font B (7 x 9))
0 ≤ ***d*** ≤ 255
k = ***c2*** – ***c1*** + 1

[Default] None

[Description] Defines user-defined characters from character code check ***c1*** to ***c2***.
- ***y*** specifies the number of bytes in the vertical direction.
- ***x*** specifies the number of dots in the horizontal direction.
- ***d*** is the dot data for the user-defined characters.

[Notes]
- Character codes from the alphanumeric characters (20H (decimal 32) to 7EH (decimal 126)) can be defined.
- Data (***d***) specifies a bit printed to 1 and not printed to 0. The dot pattern is in the horizontal direction from the left side. Any remaining dots on the right side are blank.
- The data to define a user-defined character is (***y*** x ***x***) bytes.
- When the value of ***y***, ***c1***, ***c2***, or ***x*** is out of the range, this command is canceled, and the following data is processed as normal data.
- This command can define user-defined characters for each font independently. To select a font, use **ESC !** or **ESC M**.
- Once the user-defined characters have been defined, they are available until **ESC ?** or **ESC @** is executed; the user-defined characters are redefined; the power is turned off; or the printer is reset.
- The user-defined characters are not defined at the default, and the resident characters are printed.
- The relationship between the definition data and printing result is as follows.
  Example: Downloaded character definition consists of 9x7 dots.

d1	***d3***	***d5***	***d7***	***d9***	***d11***	***d13***	MSB LSB
d2	***d4***	***d6***	***d8***	***d10***	***d12***	***d14***	MSB LSB

ESC *

[Name] Select bit-image mode

[Format]

ASCII	ESC	*	***m*** ***nL*** ***nH*** ***d1 ... dk***
Hex	1B	2A	***m*** ***nL*** ***nH*** ***d1 ... dk***
Decimal	27	42	***m*** ***nL*** ***nH*** ***d1 ... dk***

[Range]
m = 0, 1
0 ≤ ***nL*** ≤ 255
0 ≤ ***nH*** ≤ 3
0 ≤ ***d*** ≤ 255
k = ***nL*** + ***nH*** x 255

[Default] None

[Description] Selects a bit-image mode using m for the number of dots specified by (***nL*** + ***nH*** x 256) as follows:

m	Mode	Number of bits for vertical data	Dot density in horizontal	Amount of data (***k***)
0	8-dot single-density	8	Single-density	***nL*** + ***nH*** x 256
1	8-dot double-density	8	Double-density	***nL*** + ***nH*** x 256

[Notes]
- Data (***d***) specifies a bit printed to 1 and not printed to 0.
- If the bit image data exceeds the number of dots to be printed on a line, the excess data is ignored.
- The bit-image is not affected by print mode (emphasized, double-strike, underline, character size), except for upside-down printing mode.
- After printing a bit image, the printer processes normal data.
- When printing multiple line bit images, selecting unidirectional printing mode with **ESC U** enables printing patterns in which the top and bottom parts are aligned vertically.
- This command is used to print a picture or logo.
- The relationship between the bit image data and the print result is as follows.

8 dot mode (***m*** = 0,1)

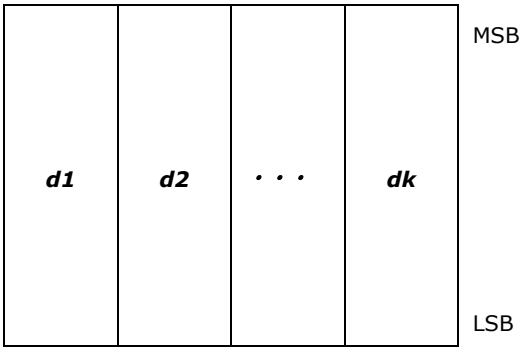

The modes selectable by ***m*** are as follows:
- "Vertical" is in the direction of paper feeding and "horizontal" is perpendicular (at right angles) to the direction of paper feeding.
- The maximum number of dots for printing depends on a DIP Switch (DSW1-8) setting and paper width. See the description of **GS (E** <Function 5>, <Function 6> for details.

m	Mode	Vertical dot density	Horizontal			
			Dot density	Set adjacent dots	Maximum number of dots	
					DSW1-8: ON	DSW 1-8: OFF
					Paper Width: 76/ 69.5/ 57.5 (mm)	Paper Width: 76/ 69.5/ 57.5 (mm)
0	8-dot single-density	72 dpi	80 dpi	Permitted	192/ 180/ 148	200/ 180/ 150
1	8-dot double-density	72 dpi	160 dpi	Prohibited	385/ 360/ 297	400/ 360/ 300

- dpi: dots per 25.4mm (dot per inch)

ESC –

[Name] Turn underline mode on/off

[Format]

ASCII	ESC	–	***n***
Hex	1B	2D	***n***
Decimal	27	45	***n***

[Range] ***n*** = 0, 1, 48, 49

[Default] ***n*** = 0

[Description] Turns underline mode on or off using ***n*** as follows:

n	**Function**
0, 48	Turns off underline mode
1, 49	Turns on underline mode (1-dot thick)
2, 50	Turns on underline mode (1-dot thick)

[Notes]
- The printer cannot underline the space set by **HT**.
- Changing the character size does not affect the current underline thickness.
- When underline mode is turned off, the following data cannot be underlined, but the thickness is maintained.
- This command and bit 7 of **ESC !** turn on and off underline mode in the same way.

ESC 2

[Name] Select default line spacing

[Format]

ASCII	ESC	2
Hex	1B	32
Decimal	27	50

[Range] None

[Default] None

[Description] Sets the line spacing to the "default line spacing."

[Notes]
- The default line spacing is about 4.23 mm (1/6 inch), which is equivalent to 12 dots.
- Selected line spacing is effective until **ESC 3** is executed, **ESC @** is executed, the printer is reset, or the power is turned off.

ESC 3

[Name] Set line spacing

[Format]

ASCII	ESC	3	***n***
Hex	1B	33	***n***
Decimal	27	51	***n***

[Range] $0 \le n \le 255$

[Default] Amount of line spacing which corresponds to "default line spacing."
(See **ESC 2** for the default line spacing.)

[Description] Sets the line spacing to ***n*** x (vertical or horizontal motion unit).

[Notes]
- The vertical motion unit is 0.176 mm (1/144 inch) (the minimum movement amount). This value equals a half dot pitch. The default value is (***n*** = 24).
- When the motion unit is changed after the line spacing is set, the line spacing setting does not change.
- Selected line spacing is effective until **ESC 2** is executed, **ESC @** is executed, the printer is reset, or the power is turned off.

ESC <

[Name] Return home

[Format]

ASCII	ESC	<	
Hex	1B	3C	
Decimal	27	60	

[Range] None

[Default] None

[Description] Moves the print head to the standby position.

[Notes]
- The standby position is on the left.
- The command rechecks the standby position;
  therefore, the print position might be shifted before and after checking the standby position.

ESC =

[Name] Select peripheral device

[Format]

ASCII	ESC	=	***n***
Hex	1B	3D	***n***
Decimal	27	61	***n***

[Range] 0 ≤ ***n*** ≤ 255

[Default] ***n*** = 1

[Description] Selects the device to which the host computer sends data, using ***n*** as follows:

n	**Function**
1	Enables the printer
2	Disables the printer
3	Enables the printer

[Notes]
- When the printer is disabled, it ignores all received data and commands with the exception of **ESC =** and real-time commands.
- If ASB is enabled when the printer is disabled by this command, the printer transmits the ASB status message whenever the status changes. See the description of **GS a** for ASB function.
- Settings of this command are effective until the printer is reset, or the power is turned off.

ESC ?

[Name] Cancel user-defined characters

[Format]

ASCII	ESC	?	***n***
Hex	1B	3F	***n***
Decimal	27	63	***n***

[Range] 32 ≤ ***n*** ≤ 126

[Default] None

[Description] Cancels the user-defined characters defined for the character code ***n***.

[Notes]
- After the user-defined characters are canceled, the resident character set is printed.
- This command can cancel user-defined characters for each font independently. To select a font, use **ESC** ! or **ESC M**.

ESC @

[Name]	Initialize printer		
[Format]	ASCII	ESC	@
	Hex	1B	40
	Decimal	27	64
[Range]	None		
[Default]	None		

[Description] The data in the print buffer is cleared, and the printer mode(s) is reset to the mode that was in effect when the power was turned on.
- Any macro definitions are not cleared.
- Contents of user NV memory are not cleared.
- NV bit image is not cleared.

[Notes]
- The DIP Switch settings are not checked again.
- The data in the receive buffer is not cleared.
- This command can cancel all the settings, such as print mode and line feed, at the same time.

ESC D

[Name]	Set horizontal tab positions				
[Format]	ASCII	ESC	D	***n1 … nk***	***NULS***
	Hex	1B	44	***n1 … nk***	***00***
	Decimal	27	68	***n1 … nk***	***0***
[Range]	0 ≤ ***n*** ≤ 255				
	0 ≤ ***k*** ≤ 32				
[Default]	***n*** = 8, 16, 24, 32, ...				
	(Every eight characters for the default font set by **ESC !** or **ESC M**)				

[Description] Sets a horizontal tab to ***n*** columns from the beginning of the line.
- ***k*** indicates the number of horizontal tab positions to be set.

[Notes]
- The horizontal tab position is stored as a value of [character width x ***n***] measured from the beginning of the line. The character width includes the right-side character spacing, and double-width characters are selected with twice the width of normal characters.
- The character width should be set before using this command. Settings of character fonts, space width, and enlargement affect the setting of character width.
- A maximum of 32 horizontal tab positions can be set. Data exceeding 32 horizontal tab positions is processed as normal data.
- This command cancels any previous horizontal tab settings.
- Transmit **[*n*]*k*** in ascending order and place a ***NUL*** code at the end. ***ESC D NUL*** cancels all horizontal tab positions.
- When [***n***] is less than or equal to the preceding value [***n***]***k*-1**, horizontal tab setting is finished, and the following data is processed as normal data.
- ***k*** is not transmission data to the printer.
- Even if the character width is changed after setting the horizontal tab positions, the setting of the horizontal tab positions will not be changed.
- Horizontal tab position settings are effective until **ESC @** is executed, the printer is reset, or the power is turned off.
- Print position can be changed by **HT**.
- When the left margin setting is changed, the horizontal tab position is also changed.

ESC E

[Name]	Turn emphasized mode on/off			
[Format]	ASCII	ESC	E	***n***
	Hex	1B	45	***n***
	Decimal	27	69	***n***
[Range]	0 ≤ ***n*** ≤ 255			
[Default]	***n*** = 0			

[Description] Turns emphasized mode on or off.
- When the LSB of ***n*** is 0, emphasized mode is turned off.
- When the LSB of ***n*** is 1, emphasized mode is turned on.

[Notes]
- This mode is effective for alphanumeric, Kana, multilingual, and user-defined characters.
- The settings of this command are effective until **ESC !** is executed, **ESC @** is executed, the printer is reset, or the power is turned off.

ESC G

[Name]	Turn double-strike mode on/off			
[Format]	ASCII	ESC	G	***n***
	Hex	1B	47	***n***
	Decimal	27	71	***n***
[Range]	0 ≤ ***n*** ≤ 255			
[Default]	***n*** = 0			

[Description] Turns double-strike mode on or off.
- When the LSB of ***n*** is 0, double-strike mode is turned off.
- When the LSB of ***n*** is 1, double-strike mode is turned on.

ESC J

[Name]	Print and feed paper			
[Format]	ASCII	ESC	J	***n***
	Hex	1B	4A	***n***
	Decimal	27	74	***n***
[Range]	0 ≤ ***n*** ≤ 255			
[Default]	None			

[Description] Prints the data in the print buffer and feeds the paper ***n*** x (vertical or horizontal motion unit).

[Notes]
- After printing, the printing position moves to the beginning of the line. The position of the left margin is the beginning of the line.
- This command is used to temporarily feed a specific length without changing the line spacing set by other commands.
- The vertical motion unit is 0.176 mm (1/144 inch) (the minimum movement amount). This value equals a half dot pitch. This command does not use the horizontal motion unit because the printer does not support page mode.

ESC K

[Name] Print and reverse feed

[Format]

ASCII	ESC	K	***n***
Hex	1B	4B	***n***
Decimal	27	75	***n***

[Range] 0 ≤ ***n*** ≤ 48

[Default] None

[Description] Prints the data in the print buffer and feeds the paper ***n*** x (vertical motion unit) in the reverse direction.

[Notes]
- After printing, the printing position moves to the beginning of the line. When a left margin is set, the position of the left margin is the beginning of the line.
- The vertical motion unit is used.
- This command is used to temporarily feed a specific length without changing the line spacing set by other commands.
- This command must not be executed consecutively more than two times.
- The vertical motion unit is 0.176 mm (1/144 inch) (the minimum movement amount). This value equals a half dot pitch. In the reverse direction, the maximum paper feed amount is 4.23 mm (24/144 inch). If the specified amount exceeds 4.23 mm (24/144 inch), the printer only prints the data and does not feed the paper.

ESC M

[Name] Select character font

[Format]

ASCII	ESC	M	***n***
Hex	1B	4D	***n***
Decimal	27	77	***n***

[Range] *n* = 0, 1, 48, 49

[Default] ***n*** = 1

[Description] Selects a character font, using ***n*** as follows:

n	**Font**
0, 48	Font A (9x9)
1, 49	Font B (7x9)

[Notes]
- The settings of this command are effective until **ESC !** is executed, **ESC @** is executed, the printer is reset, or the power is turned off.

ESC R

[Name] Select an international character set

[Format]

ASCII	ESC	R	***n***
Hex	1B	52	***n***
Decimal	27	82	***n***

[Range] 0 ≤ ***n*** ≤ 11

[Default] ***n*** = 0

[Description] Selects an international character set ***n*** as follows:

n	**Country**
0	U.S.A.
1	France
2	Germany
3	U.K.
4	Denmark I
5	Sweden
6	Italy
7	Spain I
8	Japan
9	Norway
10	Denmark II
11	PC-999

ESC R S

[Name] Select an international character set

[Format]

ASCII	ESC	R	S	***n***
Hex	1B	52	53	***n***
Decimal	27	82	83	***n***

[Range] 0 ≤ ***n*** ≤ 11

[Default] ***n*** = 0

[Description] Selects an international character set ***n*** as follows:

n	**Country**
0	U.S.A.
1	France
2	Germany
3	U.K.
4	Denmark I
5	Sweden
6	Italy
7	Spain I
8	Japan
9	Norway
10	Denmark II
11	PC-999

[Note] Selects an international character set and stores international character set in non-volatile memory.

ESC U

[Name] Turn unidirectional printing mode on/off

[Format]

ASCII	ESC	U	***n***
Hex	1B	55	***n***
Decimal	27	85	***n***

[Range] 0 ≤ ***n*** ≤ 255

[Default] ***n*** = 0

[Description] Turns unidirectional printing mode on or off.

- When the LSB of ***n*** is 0, unidirectional printing mode is turned off.
- When the LSB of ***n*** is 1, unidirectional printing mode is turned on.

[Notes]

- When unidirectional printing mode is turned off, bidirectional printing mode is automatically turned on.
- Unidirectional printing mode can be turned on when printing double-height characters or graphics or bit image or two dimension code to ensure that the top and bottom of the printing patterns are aligned.
- The settings of this command are effective until **ESC @** is executed, the printer is reset, or the power is turned off.

ESC a

[Name] Select justification

[Format]

ASCII	ESC	a	***n***
Hex	1B	61	***n***
Decimal	27	97	***n***

[Range] 0 ≤ ***n*** ≤ 2, 48 ≤ ***n*** ≤ 50

[Default] ***n*** = 0

[Description] Aligns all the data in one line to a specified position, using ***n*** as follows:

n	**Justification**
0, 48	Left justification
1, 49	Centering
2, 50	Right justification

[Notes]

- This command is enabled only when processed at the beginning of the line
- This command justifies printing data (such as characters, all graphics) and space area set by ***HT***.
- The settings of this command are effective until **ESC @** is executed, the printer is reset, or the power is turned off.

ESC c 3

[Name] Select paper sensor(s) to output paper end signals

[Format]

ASCII	ESC	c	3	***n***
Hex	1B	63	33	***n***
Decimal	27	99	51	***n***

[Range] 0 ≤ ***n*** ≤ 255

[Default] ***n*** = 15

[Description] Selects whether to output paper end signals to a parallel interface or not when a paper end is detected by the sensor selected, using ***n*** as follows:

Bit	Off/On	Hex	Decimal	Function
0	Off	00	0	Paper near end sensor disabled.
	On	01	1	Paper near end sensor enabled.
1	Off	00	0	Paper near end sensor disabled.
	On	02	2	Paper near end sensor enabled.
2	Off	00	0	Paper end sensor disabled.
	On	04	4	Paper end sensor enabled.
3	Off	00	0	Paper end sensor disabled.
	On	08	8	Paper end sensor enabled.
4-7	-	-	-	Undefined

[Notes]
- This command is enabled only with a parallel interface and is ignored with a serial interface.
- The paper near end sensor is enabled when either bit 0 or bit 1 is on or both are on.
- The paper end sensor is enabled when either bit 2 or bit 3 is on or both are on.
- When all sensors are disabled, the paper end signal is always paper present.
- The settings of this command are effective until **ESC @** is executed, the printer is reset, or the power is turned off.
- The paper near end sensor is an option. If the paper near end sensor is not included, this printer does not detect a paper near end.

ESC c 4

[Name] Select paper sensor(s) to stop printing

[Format]

ASCII	ESC	c	4	***n***
Hex	1B	63	34	***n***
Decimal	27	99	52	***n***

[Range] 0 ≤ ***n*** ≤ 255

[Default] ***n*** = 0

[Description] Selects whether to stop printing or not when the paper runs out using ***n*** as follows:

Bit	Off/On	Hex	Decimal	Function
0	Off	00	0	Paper near end sensor disabled.
	On	01	1	Paper near end sensor enabled.
1	Off	00	0	Paper near end sensor disabled.
	On	02	2	Paper near end sensor enabled.
2-7	-	-	-	Undefined

[Notes]
- It is possible to select multiple sensors to stop printing. When any sensor detects a paper end, printing stops.
- The paper end sensor is always enabled, and when it detects a paper end, the printer stops printing.
- The paper near end sensor is enabled when either bit 0 or bit 1 is on or both are on.
- When a paper near end is detected, printing stops after printing the current line and feeding the paper. The printer goes offline and Paper LED comes on after printing stops. To resume printing, cancel the "paper near end" status by replacing the paper.
- If the paper near end sensor is disabled and a paper near end is detected, printing does not stop and the printer does not go offline, but the Paper LED does come on.
- The settings of this command are effective until **ESC @** is executed, the printer is reset, or the power is turned off.

ESC c 5

[Name]	Enable/disable panel buttons				
[Format]	ASCII	ESC	c	5	***n***
	Hex	1B	63	35	***n***
	Decimal	27	99	53	***n***
[Range]	0 ≤ ***n*** ≤ 255				
[Default]	***n*** = 0				
[Description]	Enables or disables the panel buttons. - When the LSB of ***n*** is 0, all buttons are enabled. - When the LSB of ***n*** is 1, all buttons are disabled.				
[Notes]	• If panel buttons are disabled, the function of the panel button, such as feeding, will be executed when the panel button is turned on. • To prevent problems caused by accidentally pressing the buttons, use this command to disable the buttons.				

ESC d

[Name]	Print and feed n lines			
[Format]	ASCII	ESC	d	***n***
	Hex	1B	64	***n***
	Decimal	27	100	***n***
[Range]	0 ≤ ***n*** ≤ 255			
[Default]	None			
[Description]	Prints the data in the print buffer and feeds ***n*** lines.			
[Notes]	• The amount of paper feed per line is based on the value set using the line spacing command (**ESC 2** or **ESC 3**). • After printing, the printing position moves to the beginning of the line. • This command is used to temporarily feed a specific line without changing the line spacing set by other commands.			

ESC e

[Name]	Print and reverse feed ***n*** lines			
[Format]	ASCII	ESC	e	***n***
	Hex	1B	65	***n***
	Decimal	27	101	***n***
[Range]	0 ≤ ***n*** ≤ 1			
[Default]	None			
[Description]	Prints the data in the print buffer and feeds ***n*** lines in the reverse direction.			
[Notes]	• The amount of paper fed per line is based on the value set using the line spacing command (**ESC 2** or **ESC 3**). • After printing, the printing position moves to the beginning of the line. • This command is used to temporarily feed a specific line without changing the line spacing set by other commands. • This command must not be executed consecutively more than two times. • In the reverse direction, the maximum paper feed amount is 4.23 mm (24/144 inch). If the specified amount exceeds 4.23 mm (24/144 inch), the printer only prints the data and does not feed the paper.			

ESC i

[Name]	Partial cut (one point left uncut)		
[Format]	ASCII	ESC	i
	Hex	1B	69
	Decimal	27	105
[Range]	None		
[Default]	None		
[Description]	Executes a partial cut of the paper with one point left uncut.		

ESC m

[Name]	Partial cut (one point left uncut)		
[Format]	ASCII	ESC	i
	Hex	1B	69
	Decimal	27	105
[Range]	None		
[Default]	None		
[Description]	Executes a partial cut of the paper with one point left uncut.		

ESC g

[Name]	Start macro record				
[Format]	ASCII	ESC	g	0	***<k> [<nH > <nL>]$_k$ [d1...dm]$_k$***
	Hex	1B	67	00	***<k> [<nH > <nL>]$_k$ [d1...dm]$_k$***
	Decimal	27	103	0	***<k> [<nH > <nL>]$_k$ [d1...dm]$_k$***
[Range]	$k \le 10$				
	$0 \le n_L \le 255$				
	$0 \le n_H \le 255$				
	$[(256\times n_H) + n_L]_1 + \ldots + [(256\times n_H) + n_L]_k$ < 2Mbit (256KB)				
	$0 \le d \le 255$				
[Description]	Start macro definition (Define logo)				
	- k = the number of total macro index				
	- $(256\times n_H) + n_L$ = the Length of each macro				
	- $m = (256\times n_H) + n_L$				
[Notes]	The SRP-275 Printer maintains a 2M bit (256KB) section of flash memory to save NV bit image.				
	• This command is useful to define NV bit image (Logo).				
	• The NV bit image is printed by **ESC g n**.				

ESC g *n*

[Name]	Execute Macro			
[Format]	ASCII	ESC	g	***n***
	Hex	1B	67	***n***
	Decimal	27	103	***n***
[Range]	$1 \le n \le 10$			
[Description]	Execute macro using the parameter by ***n***.			
[Notes]	• ***n*** = Macro index number.			
	• The NV bit image is defined by **ESC g**.			
	• This command should be used only when the macro is downloaded by **ESC g** command.			

ESC p

[Name] Generate pulse

[Format]

ASCII	ESC	p	***m***	***t1***	***t2***
Hex	1B	70	***m***	***t1***	***t2***
Decimal	27	112	***m***	***t1***	***t2***

[Range] ***m*** = 0, 1, 48, 49
1 ≤ ***t1*** ≤ 255
1 ≤ ***t2*** ≤ 255

[Default] None

[Description] Outputs the pulse specified by ***t1*** and ***t2*** to the specified connector pin ***m*** as follows:

m	**Connector Pin**
0	Drawer kick-out connector pin 2
1	Drawer kick-out connector pin 5

- The pulse for ON time is (***t1*** x 2msec) and for OFF time is (***t2*** x 2 msec).

[Notes]
- If ***t2*** < ***t1***, the OFF time is equal to the ON time.
- If ***t2*** < 50, ***t2*** is supposed to be 50.

ESC r

[Name] Select print color

[Format]

ASCII	ESC	r	***n***
Hex	1B	72	***n***
Decimal	27	114	***n***

[Range] ***n*** = 0, 1, 48, 49

[Default] ***n*** = 0

[Description] Selects a print color, using ***n*** as follows:

n	**Selected color**
0, 48	Black
1, 49	Red

[Notes]
- This command is enabled only when processed at the beginning of the line.
- This command is effective until **ESC @** is executed, the printer is reset, or the power is turned off.

ESC t

[Name] Select character code table

[Format]

ASCII	ESC	t	***n***
Hex	1B	74	***n***
Decimal	27	116	***n***

[Range] ***n*** = 0, 1, 2, 3, 4, 5, 16, 17, 18, 19, 21, 22, 23, 24, 25, 26, 27, 28, 29, 30, 31, 32, 33, 34, 35, 255

[Default] ***n*** = 0

[Description] Selects a page ***n*** from the character code table.

n	**Page**
0	Page 0 (PC437 : U.S.A.)
1	Page 1 (Katakana)
2	Page 2 (PC850 : Multilingual)
3	Page 3 (PC860 : Portuguese)
4	Page 4 (PC863 : Canadian-French)
5	Page 5 (PC865 : Nordic)
16	Page 16 (WPC1252 : Latin1)
17	Page 17 (PC866 : Russian)
18	Page 18 (PC852 : Latin2)
19	Page 19 (PC858 : Euro)
21	Page 21 (PC862 : Israel)
22	Page 22 (PC864 : Arabic)
23	Page 23 (Thai character code 42)
24	Page 24 (WPC1253 : Greek)
25	Page 25 (WPC1254 : Turkish)
26	Page 26 (WPC1257 : Baltic)
27	Page 27 (Farsi) (*1)
28	Page 28 (WPC1251 : Russian) (*1)
29	Page 29 (PC737 : Greek) (*1)
30	Page 30 (PC775 : Baltic) (*1)
31	Page 31 (Thai character code 14)
32	Page 32 (Old Code : Israel)
33	Page 33 (WPC1255 : Israel)
34	Page 34 (Thai character code 11)
35	Page 35 (Thai character code 18)
37	Page 37 (PC857 : Turkish)
38	Page 38 (PC928 : Greek)

(*1) Only Font B available.

[Notes]
- The alphanumeric characters (20H (decimal 32) to 7FH (decimal 127)) are the same for each page. The extended characters (80H (decimal 128) to FFH (decimal 255)) are different for each page.
- The selected character code table is effective until **ESC @** is executed, the printer is reset, or the power is turned off.

ESC u

[Name] Transmit peripheral device status

[Format]

ASCII	ESC	u	***n***
Hex	1B	75	***n***
Decimal	27	117	***n***

[Range] ***n*** = 0, 48

[Description] Transmits the peripheral device status of 1 byte.

[Notes]
- The peripheral device status to be transmitted is as follows:

Bit	**Binary**	**Hex**	**Decimal**	**Status**
0	0			Drawer kick-out connector pin 3 is LOW.
	1			Drawer kick-out connector pin 3 is HIGH.
1-3	-	-	-	Undefined.
4	0	00	0	Not used. Fixed to Off.
5,6	-	-	-	Undefined.
7	0	00	0	Not used. Fixed to Off.

ESC v

[Name] Transmit paper sensor status

[Format]

ASCII	ESC	v	
Hex	1B	76	
Decimal	27	118	

[Description] Transmits the status of paper sensor(s) as 1 byte of data.

[Notes]
- See **GS r** for details on status transmission.
- The peripheral device status to be transmitted is as follows:

Bit	Binary	Hex	Decimal	Status
0,1	00	00	0	Paper near end sensor: paper adequate.
	11	03	3	Paper near end sensor: paper near end.
2,3	00	00	00	Paper end sensor: paper present.
	11	0C	12	Paper end sensor: paper not present.
4	0	00	0	Not used. Fixed to Off.
5,6	-	-	-	Undefined.
7	Off	00	0	Not used. Fixed to Off.

- When the paper end sensor detects a paper end, the printer goes offline and does not execute this command. Therefore, bits 2 and 3 of the paper sensor status do not transmit a paper end status.

ESC {

[Name] Turn upside-down printing mode on/off

[Format]

ASCII	ESC	{	***n***
Hex	1B	7B	***n***
Decimal	27	123	***n***

[Range] $1 \le n \le 255$

[Default] ***n*** = 0

[Description] Turns upside-down printing mode on or off.
- When the LSB of ***n*** is 0, upside-down printing mode is turned off.
- When the LSB of ***n*** is 1, upside-down printing mode is turned on.

[Notes]
- This command is enabled only when processed at the beginning of the line.
- The upside-down printing mode is effective for all data
- The settings of this command are effective until **ESC @** is executed, the printer is reset, or the power is turned off.
- When upside-down printing mode is turned on, the printer prints 180°-rotated characters from right to left. The line printing order is not reversed; therefore, be careful of the order of the data transmitted.

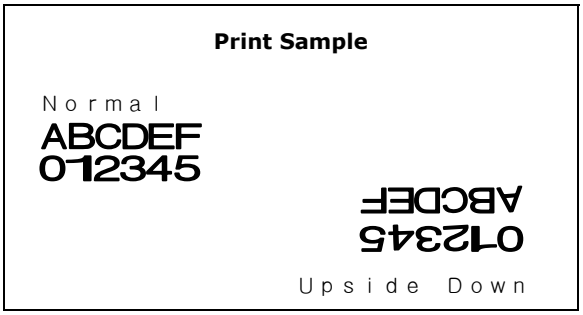

FS !

[Name] Set print mode(s) for Kanji characters (for China)

[Format]

ASCII	FS	!	***n***
Hex	1C	21	***n***
Decimal	28	33	***n***

[Range] 0 ≤ ***n*** ≤ 255

[Default] ***n*** = 0

[Description] Sets the print mode (double-width mode, double-height mode, and Kanji underline mode) for Kanji characters collectively, using n as follows:

Bit	Binary	Hex	Decimal	Status
0	Off	00	0	Reserved
1	Off	00	0	Reserved
2	Off	00	0	Double-width mode is Off
	On	04	4	Double-width mode is On
3	Off	00	0	Double-height mode is Off
	On	08	8	Double-height mode is On
4-6	Off	00	0	Reserved
7	Off	00	0	Kanji underline mode is Off
	On	80	128	Kanji underline mode is Off

FS &

[Name] Select Kanji character mode (for China)

[Format]

ASCII	FS	&
Hex	1C	26
Decimal	28	38

[Description] Selects Kanji character mode.

FS -

[Name] Turn underline mode on/off for Kanji characters (for China)

[Format]

ASCII	FS	–	***n***
Hex	1C	2D	***n***
Decimal	28	45	***n***

[Default] ***n*** = 0

[Description] Turns underline mode for Kanji characters on or off, based on the following values of ***n***:

n	Function
0, 48	Turns off underline mode for Kanji characters
1, 49	Turns on underline mode for Kanji characters

FS .

[Name] Cancel Kanji character mode (for China)

[Format]

ASCII	FS	.
Hex	1C	2E
Decimal	28	46

[Description] Cancels Kanji character mode.

FS 2

[Name] Define user-defined Kanji characters (for China)

[Format]

ASCII	FS	2	***c1***	***c2***	***d1...dk***
Hex	1C	32	***c1***	***c2***	***d1...dk***
Decimal	28	50	***c1***	***c2***	***d1...dk***

[Range] ***c1*** = FEH, A1H ≤ ***c2*** ≤ FEH

0 ≤ ***d*** ≤ 255

k = 32

[Description] Defines user-defined Kanji characters for the character codes specified by ***c1*** and ***c2***.

- ***c1*** indicates the first byte of a character code for a user-defined character.
- ***c2*** indicates the second byte of a character code for a user-defined character.
- ***d*** indicates defined data.
- ***k*** indicates the maximum number of defined data. ***k*** is a parameter for an explanation; therefore, it does not need to be transmitted.

[Notes]

- The printer processes ***k*** byte data of ***d1... dk*** as defined data. The defined data (d) sets a corresponding bit to 1 to print a dot or to 0 not to print a dot.
- Defined data is effective until it is redefined, **ESC @** is executed, the printer is reset, or the power is turned off.
- User-defined characters are not defined and space is printed at the default.
- The relationship between the defined data and a print result is as follows. In this case, the data of the definition of the user defined character (2 bytes in vertical × 16 dots in horizontal) is necessary. (***k*** = 32)

d1	***d3***	***d5***	...	***d27***	***d29***	***d31***	MSB LSB
d2	***d4***	***d6***	...	***d28***	***d30***	***d32***	MSB LSB

FS p

[Name] Print NV bit image

[Format]

ASCII	FS	p	***n***	***m***
Hex	1C	70	***n***	***m***
Decimal	28	112	***n***	***m***

[Range] 1 ≤ ***n*** ≤ 255
m = 0, 1, 48, 49

[Description] Prints a NV bit image ***n*** using the mode specified by ***m***.

m	Mode	Scaling for horizontal	Scaling for vertical
0, 48	Normal	x 1	x 1
1, 49	Double-width	x 2	x 1

[Notes]
- This command is not effective when the NV bit image specified by n has not been defined.
- This command is effective only when there is no data in the print buffer and the printer is at the beginning of the line.
- If the NV bit image exceeds one line of printing area, the printer does not print it.
- This command is not affected by print modes (such as emphasized, underline, character size), except upside-down printing mode.
- This command executes paper feed for amount needed for printing the NV bit image regardless of paper feed amount set by a paper feed setting command.
- After printing the bit image, this command sets the print position to the beginning of the line.
- When printing the NV bit image, selecting unidirectional printing mode with **ESC U** enables printing patterns in which the top and bottom parts are aligned vertically.
- The NV bit image is defined by **FS q**.

The modes selectable by ***m*** are as follows:
- "Vertical" is in the direction of paper feeding and "horizontal" is perpendicular (at right angles) to the direction of paper feeding.
- The maximum number of dots for printing depends on the setting of DIP Switch [DSW1-8] and paper width. See the description of **GS (E** <Function 5>, <Function 6> for details.

Scaling	Vertical	Horizontal		
			Maximum number of dots	
			SW2-1: ON	SW 2-1: OFF
	Dot density	Dot density	Paper Width: 76/ 69.5/ 57.5 (mm)	Paper Width: 76/ 69.5/ 57.5 (mm)
x 1	72 dpi	160 dpi	385/ 360 / 297	400/ 360/ 300
x 2	-	80 dpi	192/ 180/ 148	200/ 180/ 150

FS q

[Name] Define NV bit image

[Format]

ASCII	FS	q	***n [xL xH yL yH d1…dk]1…[xL xH yL yH d1…dk]n***
Hex	1C	71	***n [xL xH yL yH d1…dk]1…[xL xH yL yH d1…dk]n***
Decimal	28	113	***n [xL xH yL yH d1…dk]1…[xL xH yL yH d1…dk]n***

[Range]
$1 \le n \le 255$
$1 \le (xL + xH \times 256) \le 1023$ ($0 \le xL \le 255$, $0 \le xH \le 3$)
$1 \le (yL + yH \times 256) \le 288$ ($0 \le yL \le 255$, $yH = 0.1$)
$1 \le d \le 255$
$k = (xL + xH \times 256) \times (yL + yH \times 256) \times 8$
Total defined data area is 256 KB

[Description] Defines NV bit image specified.
- ***n*** specifies the number of defined NV bit images.
- ***xL***, ***xH*** specifies (***xL*** + ***xH*** x 256) bytes in the horizontal direction for the NV bit image you defined.
- ***yL***, ***yH*** specifies (***yL*** + ***yH*** x 256) bytes in the vertical direction for the NV bit image you defined.
- ***d*** specifies the definition data for the NV bit image.
- ***k*** indicates the number of the definition data. ***k*** is a parameter for an explanation; therefore, it does not need to be transmitted.

[Notes]
- NV bit image means a bit image which is defined in a non-volatile memory. The NV bit image defined is effective until the next NV bit image is defined.
- This command is effective only when processed at the beginning of the line.
- ***k*** bytes data of ***d1…dk*** is processed as a defined data of a NV bit image. The defined data (***d***) specifies a bit printed to 1 and not printed to 0.
- All NV bit images previously defined are canceled.
- After processing this command, the printer executes a software reset. Therefore, processing this command enables the printer to be in the correct status as when the power is turned on.
- The limitations during processing of this command are as follows:
  - Paper cannot be fed by using paper FEED button.
  - The real-time commands are ignored.
  - Even if the ASB function is effective, the ASB status cannot be transmitted.
- The NV bit image is printed by **FS p**.
- Bit image data and print result are as follows:

d1	***dY+1***	...	. . .	MSB LSB
d2	***dY+2***	...	***dk-2***	MSB LSB
. . .	. . .	...	***dk-1***	MSB LSB
dY	***dY x 2***	...	***dk***	MSB LSB

$Y = yL + yH \times 256$

FS S

[Name] Set Kanji character spacing (for China)

[Format]

ASCII	FS	S	***n1***	***n2***
Hex	1C	53	***n1***	***n2***
Decimal	28	83	***n1***	***n2***

[Range] 0 ≤ ***n1*** ≤ 32, 0 ≤ ***n2*** ≤ 32

[Default] ***n1*** = 0, ***n2*** = 0

[Description] Sets left- and right-side spacing ***n1*** and ***n2***.

- Specifies the left-side character spacing to [***n1***×horizontal unit].
- Specifies the right-side character spacing to [***n2***×horizontal unit].

[Notes]

- When a character size is set to N times as large as a normal size, both right- and left-side character spacings are also set to N times as large as a normal size.
- The character spacing is effective until **ESC @** is executed, the printer is reset, or the power is turned off.

FS W

[Name] Turn quadruple-size mode on/off for Kanji characters (for China)

[Format]

ASCII	FS	W	***n***
Hex	1C	57	***n***
Decimal	28	87	***n***

[Range] 0 ≤ ***n*** ≤ 255

[Default] ***n*** = 0

[Description] Turns quadruple-size mode on or off for the characters.

- When the LSB of ***n*** is 0, quadruple-size mode for Kanji characters is turned off and normal size is specified.
- When the LSB of ***n*** is 1, quadruple-size mode for Kanji characters is turned on.

FS ?

[Name] Cancel user-defined Kanji characters (for China)

[Format]

ASCII	FS	?	***c1***	***c2***
Hex	1C	3F	***c1***	***c2***
Decimal	28	63	***c1***	***c2***

[Range] ***c1*** = FEH, A1H ≤ ***c2*** ≤ FEH

[Description] Cancels user-defined Kanji characters for the character codes specified by ***c1*** and ***c2***.

- ***c1*** specifies the first byte of a character code for a user-defined Kanji character.
- ***c2*** specifies the second byte of a character code for a user-defined Kanji character.

GS (A

[Name] Execute test print

[Format]

ASCII	GS	(	A	***pL***	***pH***	***n***	***m***
Hex	1D	28	41	***02***	***00***	***n***	***m***
Decimal	29	40	65	***2***	***0***	***n***	***m***

[Range] 1 ≤ ***m*** ≤ 3, 49 ≤ ***m*** ≤ 3

[Description] Executes a specified test print.

- ***pL*** and ***pH*** specify the number of parameters following ***n*** to (***pL*** + ***pH*** x 256) bytes.
- ***n*** specifies paper used for the test print as follows:

n	**Paper**
0, 48	Basic sheet (paper roll)
1, 49 2, 50	Paper roll

- ***m*** specifies a type of the test print as follows:

m	**Type**
1, 49	Hexadecimal dump
2, 50	Printer status printing
3, 51	Rolling pattern

[Notes]

- This command is effective only when processed at the beginning of the line.
- After processing this command, the printer performs a software reset. Executing this command puts the printer in the same status as when the power is turned on. Transmit commands or data after confirming the complete software reset.
- If hexadecimal dump (***m*** = 1, 49) is specified, the printer prints a message. Transmit commands or data after the printing.
- When processing printer status printing (***m*** = 2, 50), rolling pattern printing (***m*** = 3, 51), ASB status and real-time commands cannot be used.

GS (C

[Name] Edit NV user memory

[Format]

ASCII	GS	(	C	***pL***	***pH***	***m***	***fn***	***b***	***[c1, c2]***	***[d1...dk]***
Hex	1D	28	43	***pL***	***pH***	***m***	***fn***	***b***	***[c1, c2]***	***[d1...dk]***
Decimal	29	40	67	***pL***	***pH***	***m***	***fn***	***b***	***[c1, c2]***	***[d1...dk]***

[Description] Deletes, stores, and transmits data in the NV user memory area based on the functions defined in the table below. Also sends status information for the amount of space used in NV RAM and the amount of space still available.

- The function code (***fn***) specifies the function.

fn	**Function**	**Description**
0, 48	Function 0	Deletes specified record
1, 49	Function 1	Stores data in specified record
2, 50	Function 2	Sends data stored in specified record
3, 51	Function 3	Sends capacity currently being used
4, 52	Function 4	Sends available capacity
5, 53	Function 5	Transmits the key code of the record stored in the NV user memory
6, 54	Function 6	Cancels all records stored in the NV user memory

- ***pL*** and ***pH*** specify the bytes following parameter ***pH*** (***m*** and [***a1 b1***] ... [***ak bk***]) as (***pL*** + (***pH*** x 256)).
- The other parameters are explained under each of the functions.

[Notes]

- The command function is defined by the function code (***fn***). The command operation differs, depending on the function.
- The NV user memory area is especially provided for storing character data in the non-volatile memory built into the printer.
- The NV user memory data configuration is as follows: key code + data + terminator. This unit is called a record.
  - A record is one data processing unit in the NV user memory. It is identified and specified by a key code. One record consists of a group of 4 bytes of data or more.
  - The key code is a 2-byte ID code used to identify records and is created with parameters ***c1***, ***c2*** in the command. You can specify any desired character code from 32H – 7EH.

- Data is the character string specified by ***d1... dk*** in Function 1 of the ***GS (C*** command. You cannot specify control codes 00H – 1FH, 7FH as character string data.
- The terminator is a 1-byte code, automatically assigned when the printer stores data.

• NV user memory data remains valid until the host sends a deletion or storage function command.
• Data is written to the non-volatile memory by Function 1, 2, or 3. When using those commands, note the following:
- The printer may be BUSY while the functions are performing. The printer does not process any received data while it is BUSY; therefore, under no circumstances should the host send data at this time.

• Note the rules below for the operating NV memory (store data / cancel data):
- Paper feeding is disabled by the paper FEED button.
- The printer ignores real-time commands.
- Even if "ASB is enabled" is specified, the printer does not send ASB status.

• You can use the NV user memory as an index of note for the following:
- Customize information: index of the NV bit image definition contents.
- Maintenance information: ink ribbon replacement date, telephone number of company, etc.

[Notes for transmitting processing of the block data]

• Data is send by Function 2, 3, 4, or 5. When you use these functions, obey the following rules.
- When the host PC transmits the function data, transmit the next data after receiving the corresponding data from the printer.
- With serial interface printers, use this function when the host is READY.
- With a parallel interface printer, data sent (excluding ASB status) with this command ("Header to NUL") is temporarily stored in the printer send buffer, as with other data. When the host goes into Reverse mode, the printer then sends the data sequentially from the beginning of the send buffer. When using this command, promptly change into Reverse mode to start the data receive process.

• You cannot use ASB status and real-time commands while "Header to NUL" data is being sent.
• When communication with the printer uses XON/XOFF control with serial interface, the XOFF code may interrupt the "Header to NUL" data string.
• The transmission information for each function can be identified to other transmission data according to specific data of the transmission data block. When the header transmitted by the printer is [hex = 37H/decimal =55], treat NUL [hex = 00H/decimal =0] as a data group and identify it according to the combination of the header and the identifier.

[Notes for ESC/POS Handshaking Protocol]

• Use ESC/POS Handshaking Protocol below for Functions 2 and 5:

Step	Host process	Printer process
1	Send **GS (C** <Function 2>.	Start processing of Function 2. (Read specified record back to host.)
2	Receive data from printer.	Send data in memory.
3	Send response code. (*1)	Continue processing (*2) (*3) according to response.

(*1) Response code

ASCII	Hex	Decimal	Request
ACK	06	6	Send next data.
NAK	15	21	Resend previously sent data.
CAN	18	24	Cancel send process.

(*2) Processing according to response

(unsent data exists, identified by send data set "Identification status")

Response code	Process
ACK	Start send processing for next data.
NAK	Resend previously sent data.
CAN	End processing for this command.

• Processing the codes except for ACK, NAK, and CAN performs the same processing as **CAN**.

(*3) Processing according to response

(no unsent data, identified by send data set "Identification status")

Response code	Process
ACK, CAN	End processing for this command.
NAK	Resend previously sent data.

• Record data definition area capacity is 64 KB.

GS (C *pL pH m fn b c1 c2* <Function 0>

[Format]	ASCII	GS	(	C	***pL***	***pH***	***m***	***fn***	***b***	***c1***	***c2***
	Hex	1D	28	43	***05***	***00***	***00***	***fn***	***00***	***c1***	***c2***
	Decimal	29	40	67	***5***	***0***	***0***	***fn***	***0***	***c1***	***c2***

[Range] (***pL*** + ***pH*** x 256) = 5 (***pL*** = 5, ***pH*** = 0)
m = 0
fn = 0, 48
b = 0
32 ≤ ***c1*** ≤ 126
32 ≤ ***c2*** ≤ 126

[Description] Deletes the specified record stored in the NV user memory. The deleted area becomes an "unused" area available for storage.

[Notes]
- This command is valid only at the beginning of the line.
- You cannot include macros with this command, so do not use this command while defining macros.

GS (C *pL pH m fn b c1 c2 d1...dk* <Function 1>

[Format]	ASCII	GS	(	C	***pL***	***pH***	***m***	***fn***	***b***	***c1***	***c2***	***d1...dk***
	Hex	1D	28	43	***pL***	***pH***	***00***	***fn***	***00***	***c1***	***c2***	***d1...dk***
	Decimal	29	40	67	***pL***	***pH***	***0***	***fn***	***0***	***c1***	***c2***	***d1...dk***

[Range] 6 ≤(***pL*** + ***pH*** x 256) ≤65535 (0≤ ***pL*** ≤255, 0≤ ***pH*** ≤255)
m = 0
fn = 1, 49
b = 0
32 ≤ ***c1*** ≤ 126
32 ≤ ***c2*** ≤ 126
32 ≤ ***d*** ≤ 254
k = (***pL*** + ***pH*** x 256) -5

[Description] Stores data (***d1... dk***) in the record specified by parameters ***c1*** and ***c2*** (the key code ID numbers).
- When the specified record already exists, the data is overwritten.
- A terminator is automatically assigned.

[Notes]
- This command is valid only at the beginning of the line.
- This function uses the "data quantity (***k***) + 3 byte" area for execution.
- You cannot use this command when the NV user memory does not have enough capacity to store the specified records. The available capacity is confirmed by Function 4.

GS (C *pL pH m fn b c1 c2* <Function 2>

[Format]

ASCII	GS	(	C	***pL***	***pH***	***m***	***fn***	***b***	***c1***	***c2***
Hex	1D	28	43	***05***	***00***	***00***	***fn***	***00***	***c1***	***c2***
Decimal	29	40	67	***5***	***0***	***0***	***fn***	***0***	***c1***	***c2***

[Range]

(***pL*** + ***pH*** x 256) = 5 (***pL*** = 5, ***pH*** = 0)
m = 0
fn = 2, 50
b = 0
32 ≤ ***c1*** ≤ 126
32 ≤ ***c2*** ≤ 126

[Description]

Transmits the data for the record with the ID code specified by parameters ***c1***, ***c2*** in the NV user memory.
- ESC/POS Handshaking Protocol is required for this function.

[Notes]

• When the specified record exists, the printer sends the "Header to NUL" data shown below:

Send data	Hex	Decimal	Data quantity
Header	37H	55	1 byte
Identifier	70H	112	1 byte
Identification status (*1) (*2)	40H or 41H	64 or 65	1 byte
Data (*3)	20H FEH	32 254	1 -80 bytes
NUL	00H	0	1 byte

(*1) When the quantity of stored data exceeds 80 bytes, the printer performs partial processing, using the following rules:
- If there is unsent data, the identification status of the third byte is 41H or 65 decimal.
- If there is no unsent data, the identification status of the third byte is 40H or 64 decimal.

(*2) The printer performs batch processing when the data to be stored in the specified record is 80 bytes or less. At this time, the identification status of the third byte is 40H or 64 decimal.

(*3) The key code and terminator are not included in the data.

• If the host specifies a nonexistent record, the printer sends the "Header to NUL" data shown below:

Send data	Hex	Decimal	Data quantity
Header	37H	55	1 byte
Identifier	70H	112	1 byte
Identification status	40H	64	1 byte
NUL	00H	0	1 byte

• See [Notes for transmission process] for description of transmission process.
• See [Notes for ESC/POS Handshaking Protocol] for description of ESC/POS Handshaking Protocol.

GS (C *pL pH m fn b* <Function 3>

[Format]

ASCII	GS	(	C	***pL***	***pH***	***m***	***fn***	***b***
Hex	1D	28	43	***03***	***00***	***00***	***fn***	***00***
Decimal	29	40	67	***3***	***0***	***0***	***fn***	***0***

[Range]
(***pL*** + ***pH*** x 256) = 3 (***pL*** = 3, ***pH*** = 0)
m = 0
fn = 3, 51
b = 0

[Description]
The printer sends the host the number of data bytes currently used in the NV memory area.
- ESC/POS Handshaking Protocol is not required for this function.

[Notes]
• With this function, the printer sends the "Header to NUL" data shown below:

Send data	Hex	Decimal	Data quantity
Header	37H	55	1 byte
Identifier	28H	40	1 byte
Capacity Used (*1)	30H - 39H	48 - 57	1 - 8 bytes
NUL	00H	0	1 byte

(*1) The quantity of stored data bytes, plus the key code and terminator, equal the capacity being used.

• The decimal value expressing the capacity being used is converted to ASCII character data and sent from the most significant digit.

Example: When 120 bytes is used, the number 120 is expressed with three bytes of data (Hexadecimal: 31H, 32H, and 30H / decimal numbers 49, 50, and 48).
When no memory area is used, the number 0 is expressed with 1 byte of data (Hexadecimal: 30H / decimal number 48).

• See previous [Notes for transmission process] for process sending data group.

GS (C *pL pH m fn b* <Function 4>

[Format]

ASCII	GS	(	C	***pL***	***pH***	***m***	***fn***	***b***
Hex	1D	28	43	***03***	***00***	***00***	***fn***	***00***
Decimal	29	40	67	***3***	***0***	***0***	***fn***	***0***

[Range]
(***pL*** + ***pH*** x 256) = 3 (***pL*** = 3, ***pH*** = 0)
m = 0
fn = 4, 52
b = 0

[Description]
The printer sends the available NV user memory.
- ESC/POS Handshaking Protocol is not required for this function.

[Notes]
• With this function, the printer sends the "Header to NUL" data shown below:

Send data	Hex	Decimal	Data quantity
Header	37H	55	1 byte
Identifier	29H	41	1 byte
Available Capacity (*1)	30H- 39H	48- 57	1-8 bytes
NUL	00H	0	1 byte

(*1) The available capacity indicates the number of bytes not being used.

• The decimal value for the available capacity is converted to ASCII character data and sent from the most significant digit.

Example: When 120 bytes is available (not being used), the number 120 is expressed with 3 bytes of data (Hexadecimal: 31H, 32H, and 30H / decimal numbers = 49, 50, and 48).

• See previous [Notes for transmission process] for process sending data group.

GS (C *pL pH m fn b* <Function 5>

[Format]	ASCII	GS	(	C	***pL***	***pH***	***m***	***fn***	***b***
	Hex	1D	28	43	***03***	***00***	***00***	***fn***	***00***
	Decimal	29	40	67	***3***	***0***	***0***	***fn***	***0***

[Range] (***pL*** + ***pH*** x 256) = 3 (***pL*** = 3, ***pH*** = 0)
m = 0
fn = 5, 53
b = 0

[Description] Transmits the key code ID for the record stored in the NV user memory.
- ESC/POS Handshaking Protocol is required for this function.

[Notes]
• When record exists, the printer sends the "Header to NUL" data as shown below:

Send data	Hex	Decimal	Data quantity
Header	37H	55	1 byte
Identifier	71H	113	1 byte
Identification status (*1) (*2)	40H or 41H	64 or 65	1 byte
Data (*3)	20H-7EH	32-126	2-80 bytes
NUL	00H	0	1 byte

(*1) When the quantity of stored data exceeds 40 records, the printer performs partial processing, using the following rules:
- If there is unsent data, the identification status of the third byte is 41H or 65 decimal.
- If there is no unsent data, the identification status of the third byte is 40H or 64 decimal.

(*2) The printer performs batch processing when the data to be stored in the specified record is 40 records or less. At this time, the identification status of the third byte is 40H or 64 decimal.

(*3) The data is the key code. A terminator is not included in the data.

• If the host specifies a nonexistent record, the printer sends the "Header to NUL" data shown below:

Send data	Hex	Decimal	Data quantity
Header	37H	55	1 byte
Identifier	71H	113	1 byte
Identification status (*1) (*2)	40H	64	1 byte
NUL	00H	0	1 byte

• See [Notes for transmission process] for description of transmission process.
• See [Notes for ESC/POS Handshaking Protocol] for description of ESC/POS Handshaking Protocol.

GS (C *pL pH m fn b d1 d2 d3* <Function 6>

[Format]	ASCII	GS	(	C	***pL***	***pH***	***m***	***fn***	***b***	***d1***	***d2***	***d3***
	Hex	1D	28	43	***06***	***00***	***00***	***fn***	***00***	***43***	***4C***	***52***
	Decimal	29	40	67	***6***	***0***	***0***	***fn***	***0***	***67***	***76***	***82***

[Range] (***pL*** + ***pH*** x 256) = 6 (***pL*** = 6, ***pH*** = 0)
m = 0
fn = 6, 54
b = 0
d1 = 67
d2 = 76
d3 = 82

[Description] The printer deletes all records stored in the NV user memory.
- All area is changed to unused area.

[Notes]
• In standard mode, this command is effective only at the beginning of the line.
• In page mode, this command is ignored.

GS (D

[Name] Enable/disable real-time command

[Format]

ASCII	GS	(	D	***pL pH m [a1 b1]...[ak bk]***
Hex	1D	28	44	***pL pH 14 [a1 b1]...[ak bk]***
Decimal	29	40	68	***pL pH 20 [a1 b1]...[ak bk]***

[Range] (***pL*** + ***pH*** x 256) = 3, 5 (***pL*** = 3, 5, ***pH*** = 0)
m = 20
a = 1
b = 0, 1, 48, 49

[Default] ***a*** = 1/ ***b*** = 1 (**DLE DC4** ***fn m t*** (***n*** = 1): enable)

[Description] Specifies enable or disable of a real-time command.

- ***pL***, ***pH*** sets the number of parameters after ***pH*** (***m*** and [***a1 b1***]...[***ak bk***]) to (***pL*** + ***pH*** x 256) bytes.
- ***a*** specifies the type of real-time command.
- ***b*** specifies enable/disable of real-time command processing.

a	***b***	**Real-time command type**
1	0, 48	Disable **DLE DC4** ***n m t*** (***n*** = 1): output a specified pulse in real-time (It does not process)
	1, 49	Enable **DLE DC4** ***n m t*** (***n*** = 1): output a specified pulse in real-time (It does process)

DLE DC4 ***n m t*** (***n***=1): output a specified pulse in real-time.

[Notes]

- The printer processes each real-time command that is enabled upon receiving it.
- A real-time command specified as disabled is not processed.
- The setting of this command is effective until **ESC @** is executed, the printer is reset, or the power is turned off.
- If you transmit a command for a bit image or defined data that contains the sequence **DLE DC4**, be sure to disable real-time command processing before transmitting the bit image or defined data command. Then the printer will process the sequence DLE DC4 as image data.

GS (E

[Name] User setup commands

[Format]

ASCII	GS	(	E	***pL pH fn [parameters]***
Hex	1D	28	45	***pL pH fn [parameters]***
Decimal	29	40	69	***pL pH fn [parameters]***

[Description] Controls the user setting modes. The table below explains the functions available in this command.

- The value of ***fn*** specifies the function.

fn	Function	
1	Function1	Changes into the user setting mode
2	Function2	Ends user setting mode session. (Performs a software reset.)
3	Function3	Changes the Memory Switch
4	Function4	Transmits the host the value for the Memory Switch
5	Function5	Changes the customized setting values
6	Function6	Transmits the customized setting values
11	Function11	Sets communication condition of serial interface
12	Function12	Transmits communication condition of serial interface

- ***pL*** and ***pH*** specify the number of bytes for the parameters following ***pH*** (***fn*** and [***a1 b1***] ... [***ak bk***]) as(***pL*** + ***pH*** x 256).
- The other parameters are explained under the respective functions.

[Notes]

- The value of parameter ***fn*** determines the function number for this command. Command operation differs, depending on the function number.
- The value defined by the user setting mode is effective until redefined by this mode again. It is not initialized by turning off the power or executing **ESC @**.
- User setting mode is a special mode to change settings for the printer's built-in non-volatile memory.
- To change a setting, you must change the printer into user setting mode, using Function 1.
- The setting you specify is activated by transmitting a Function 2 command upon completion of making the setting.
- Note the rules below for the user setting mode:
  - The printer does not process character data.
  - The printer does not process commands other than this command and the **GS I** command.
  - The printer ignores real-time commands.
  - The printer does not transmit ASB status.
- Functions 4, 6, 12, the functions used to transmit the current settings to the host, can be used at any time, without changing into the user setting mode.
- Data is written to the non-volatile memory by Functions 3, 5 and 11. Note the following when using those functions:
  - The printer might be BUSY. In this case, be sure not to transmit a command from the host because the printer will not receive the data.

[Notes for transmission process]

- Data is transmitted by Functions 1, 4, 6 and 12. When you use these functions, obey the following rules.
  - When the host PC transmits the function data, transmit the next data after receiving the corresponding data from the printer.
  - With a serial interface printer, be sure to use this function when the host can receive data.
  - With a parallel interface printer, data transmitted (excluding ASB status) with this command ("Header to NUL") is temporarily stored in the printer transmit buffer, as with other data. When the host goes into reverse mode, the printer then transmits the data sequentially from the beginning of the transmit buffer. When using this command, promptly change into reverse mode to start the data receive process.
  - You cannot use ASB status and real-time commands while "Header to NUL" data is being transmitted.
  - When communication with the printer uses XON/XOFF control with serial interface, the XOFF code may interrupt the "Header to NUL" data string.
  - The transmission information for each function can be identified to other transmission data according to specific data of the transmission data block. When the header transmitted by the printer is [hex =37H/decimal =55], treat NUL [hex = 00H/decimal =0] as a data group and identify it according to the combination of the header and the identifier.

GS (E *pL pH fn d1 d2* <Function 1>

[Format]	ASCII	GS	(	E	***pL***	***pH***	***fn***	***d1***	***d2***
	Hex	1D	28	45	***03***	***00***	***01***	***49***	***4E***
	Decimal	29	40	69	***3***	***0***	***1***	***73***	***78***

[Range] (***pL*** + ***pH*** x 256) = 3 (***pL*** = 3, ***pH*** = 0)
fn = 1
d1 = 73
d2 = 78

[Description] This command changes the printer into the user setting mode.

[Notes]
- This command is valid only at the beginning of the line.
- When the printer goes into the user setting mode, it transmits a "mode change notice" back to the host.

Transmit data	Hex	Decimal	Data quantity
Header	37H	55	1 byte
Identifier	20H	32	1 byte
NUL	00H	0	1 byte

- When it has executed this function, send the next commands after checking the "mode change notice".
- See previous [Notes for transmission process] for process sending data group.

GS (E *pL pH fn d1 d2 d3* <Function 2>

[Format]	ASCII	GS	(	E	***pL***	***pH***	***fn***	***d1***	***d2***	***d3***
	Hex	1D	28	45	***04***	***00***	***02***	***4F***	***55***	***54***
	Decimal	29	40	69	***4***	***0***	***2***	***79***	***85***	***84***

[Range] (***pL*** + ***pH*** x 256) = 4 (***pL*** = 4, ***pH*** = 0)
fn = 2
d1 = 79
d2 = 85
d3 = 84

[Description] Ends the user setting mode, and the printer performs a software reset.

[Notes]
- This function is performed when the printer is in user setting mode.
- After the software reset, the printer goes into the power on state.
- Executing this function enables setting values set in user setting mode (such as Memory Switch or customize value).
- Be sure to execute this function after changing all the setting values.

GS (E *pL pH fn [a1 b1₈...b11]...[ak nk₈ nk1]* <Function 3>

[Format]	ASCII	GS	(	E	***pL pH fn [a1 b1₈...b11]...[ak nk₈ nk1]***
	Hex	1D	28	45	***pL pH 03 [a1 b1₈...b11]...[ak nk₈ nk1]***
	Decimal	29	40	69	***pL pH 3 [a1 b1₈...b11]...[ak nk₈ nk1]***

[Range] ***a*** = 2, 8

[Default] all Memory Switches are OFF (***b*** = 48).

[Description] Changes the Memory Switch specified by ***a*** to the value specified by ***b***.

- When ***b*** = 48, the Memory Switch is set to OFF.
- When ***b*** = 49, the Memory Switch is set to ON.
- When ***b*** = 50, does not change the Memory Switch.

• When ***a*** = 2, Memory Switch 2 is set as follows:

MSW 2-8	MSW 2-7	MSW 2-6	MSW 2-5	MSW 2-4	MSW 2-3	MSW 2-2	MSW 2-1	Character Table
48	48	48	48	48	48	48	48	Page 0 (PC437 : U.S.A.)
48	48	48	48	49	48	48	48	Page 1 (Katakana)
48	48	48	49	48	48	48	48	Page 2 (PC850 : Multilingual)
48	48	48	49	49	48	48	48	Page 3 (PC860 : Portuguese)
48	48	49	48	48	48	48	48	Page 4 (PC863 : Canadian-French)
48	48	49	48	49	48	48	48	Page 5 (PC865 : Nordic)
48	48	49	49	48	48	48	48	Page 16 (WPC1252 : Latin1)
48	48	49	49	49	48	48	48	Page 17 (PC866 : Russian)
48	49	48	48	48	48	48	48	Page 18 (PC852 : Latin2)
48	49	48	48	49	48	48	48	Page 19 (PC858 : European)
48	49	48	49	48	48	48	48	Page 21 (PC862 : Israel)
48	49	48	49	49	48	48	48	Page 22 (PC864 : Arabic)
48	49	49	48	48	48	48	48	Page 23 (Thai character code 42)
48	49	49	48	49	48	48	48	Page 24 (WPC1253 : Greek)
48	49	49	49	48	48	48	48	Page 25 (WPC1254 : Turkish)
48	49	49	49	49	48	48	48	Page 26 (WPC1257 : Baltic)
49	48	48	48	48	48	48	48	Page 27 (Farsi) (*1)
49	48	48	48	49	48	48	48	Page 28 (WPC1251 : Russian) (*1)
49	48	48	49	48	48	48	48	Page 29 (PC737 : Greek) (*1)
49	48	48	49	49	48	48	48	Page 30 (PC775 : Baltic) (*1)
49	48	49	48	48	48	48	48	Page 31 (Thai character code 14)
49	48	49	48	49	48	48	48	Page 32 (Old Code : Israel)
49	48	49	49	48	48	48	48	Page 33 (WPC1255 : Israel)
49	48	49	49	49	48	48	48	Page 34 (Thai character code 11)
49	49	48	48	48	48	48	48	Page 35 (Thai character code 18)
49	49	48	48	49	48	48	48	Reserved
49	49	48	49	48	48	48	48	Page 37 (PC857 : Turkish)
49	49	48	49	49	48	48	48	Page 38 (PC928 : Greek)
49	49	49	48	48	48	48	48	Reserved
49	49	49	48	49	48	48	48	Reserved
49	49	49	49	48	48	48	48	Reserved
49	49	49	49	49	48	48	48	Reserved

(*1) Only Font B available.

• When ***a*** = 8, Memory Switch 8 is set as follows:

MSW	Setting value (*b*)	Function
8-1	48	The printer is printing normally.
	49	The printer is printing upside-down.
8-2	48	The printer is printing font B.
	49	The printer is printing font A.
8-3	48	The printer sound a buzzer when the paper is out.
	49	The printer does not sound a buzzer when the paper is out.
8-4	48	Reserved
8-5	48	The printer status is sent back as "the paper empty" when the rear cover is opened.
	49	The printer status is sent back "the rear cover open" when the rear cover is opened.
8-6	48	Reserved: Fixed to OFF (Don't change the setting)
8-7	48	Printer BUSY is released when the remaining capacity of the receive buffer goes to 640 bytes.
	49	Printer BUSY is released when the remaining capacity of the receive buffer goes to 522 bytes.
8-8	48	Printer cover open during operation: Error that automatically recovers.
	49	Printer cover open during operation: Error that can possibly recover.

- Setting of MSW 8-5 affects the statuses as follows:

• Basic ASB status (See "**GS a**" command)

• Real-time status (See "**DLE EOT**" command)

GS (E *pL pH fn a* <Function 4>

[Format]	ASCII	GS	(	E	***pL***	***pH***	***fn***	***a***
	Hex	1D	28	45	***02***	***00***	***04***	***a***
	Decimal	29	40	69	***2***	***0***	***4***	***a***

[Range] (***pL*** + ***pH*** x 256) = 2 (***pL*** = 2, ***pH*** = 0)

fn = 4

a = 2, 8

[Description] The printer transmits the host the value for the Memory Switch specified by parameter a.

[Notes]
• This function works both in user setting mode and during normal printer operation.
• The printer transmits the "Header to NUL" data shown below:

Transmit data	Hex	Decimal	Data quantity
Header	37H	55	1 byte
Identifier	21H	33	1 byte
Setting value	30H or 31H	48 or 49	8 byte
NUL	00H	0	1 byte

• The value of the Memory Switch is transmitted from bit 8 to bit 1. 48 or 49 is transmitted for a bit of Reserved.
• See description of <Function 3> of this command for detail of Memory Switch.
• See [Notes for the processing to transmit data] for description of the processing to transmit data.

GS (E *pL pH fn [a1 n1L n1H]...[ak nkL nkH]* <Function 5>

[Format]	ASCII	GS	(	E	***pL pH fn [a1 n1L n1H] ... [ak nkL nkH]***
	Hex	1D	28	45	***pL pH 05 [a1 n1L n1H] ... [ak nkL nkH]***
	Decimal	29	40	69	***pL pH 5 [a1 n1L n1H] ... [ak nkL nkH]***

[Range] 4 ≤ (***pL*** + ***pH*** x 256) ≤ 65533
(0 ≤ ***pL*** ≤ 255, 0 ≤ ***pH*** ≤ 255: (***pL*** + ***pH*** x 256) = 3 x ***k*** + 1)
fn = 5
1 ≤ ***k*** ≤ 21844
a = 3
nL + ***nH*** x 256 = 2, 4, 5 (***nL*** = 2, 4, 5, ***nH*** = 0)

[Default] (***nL*** + ***nH*** x 256) = 5 (***nL*** = 5, ***nH*** = 0) [default value when ***a*** = 3]

[Description] Changes the customized value specified by parameter ***a*** to (***nL*** + ***nH*** x 256).

a	**Type of customized value**
3	Paper width

[Notes]
- This function works only in user setting mode.
- Customized value is specified by unit of 3 bytes (***a***, ***nL***, ***nH***)
  Ex: A transmitted data as specifying paper width;
  ASCII: **GS (E *pL pH fn a nL nH***
  Hexadecimal: 1D 2B 45 04 00 05 03 06 00
  Decimal: 29 40 69 4 0 5 3 6 0
- To activate the customized values you set with this function, you must transmit a Function 2 command.
- If you attempt to set a combination of settings that is not possible, the NV bit image memory setting is reduced to an allowable value.
- Paper width settings (***a*** = 3)

(***nL*** + ***nH*** x 256)	Paper width
2	57.5mm (2.26 inch)
4	69.5 mm (2.74 inch)
5	76 mm (3.00 inch)

- Setting the "paper width"(***a*** = 3) can be changed by "Memory Switch setting mode" by the panel switch operation when the power supply is turned on.

GS (E *pL pH fn a* <Function 6>

[Format]

ASCII	GS	(	E	***pL***	***pH***	***fn***	***a***
Hex	1D	28	45	***02***	***00***	***06***	***a***
Decimal	29	40	69	***2***	***0***	***6***	***a***

[Range] (***pL*** + ***pH*** x 256) = 2 (***pL*** = 2, ***pH*** = 0)
fn = 6
a = 3

[Description] The printer transmits to the host the customized value for the NV memory area specified by parameter ***a***.

a	**Type of customized value**
3	Paper width

[Notes]
- This function works both in user setting mode and during normal printer operation.
- The printer transmits the data below ("Header to NUL") with this function:

Transmit data	**Hex**	**Decimal**	**Data quantity**
Header	37H	55	1 byte
Identifier	27H	39	1 byte
Value number (*1)	30H or 31H	48 - 49	1-3 bytes

Transmit data	**Hex**	**Decimal**	**Data quantity**
Separation code	1FH	31	1 byte
Setting (*2)	30H - 39H	48 - 59	1-5 bytes
NUL	00H	0	1-3 bytes

(*1) The decimal value for the customized value number (***a***; parameter of this function) is converted to ASCII character data and sent starting from the high order end.
Example:
If the ***a*** is 118, the "118" (expressed hexadecimally as 31H, 31H, 38H. Decimally as 49, 49, 56) is converted to 3-bytes data.

(*2) The customized value is determined by the value defined in Function 5.
Example 1:
When setting value is 120, the customized value is "120" expressed with 3 bytes of data (hex numbers: 31H,32H, 30H / decimal numbers: 49, 50, 48).
Example 2:
When setting value is -1, the customized value is "65535" expressed with 5 bytes of data (hex numbers: 36H,35H, 35H, 33H, 35H / decimal numbers: 54, 53, 53, 51, 53).

GS (E *pL pH fn a d1...dk* <Function 11>

[Format]	ASCII	GS	(	E	***pL pH fn a d1...dk***
	Hex	1D	28	45	***pL pH 0B a d1...dk***
	Decimal	29	40	69	***pL pH 11 a d1...dk***

[Range] 3 ≤ (***pL*** + ***pH*** x 256) ≤ 8 (3 ≤ ***pL*** ≤ 8, 0 ≤ ***pH*** ≤ 255)
fn = 11
1 ≤ ***a*** ≤ 4
48 ≤ ***d*** ≤ 57 [***a*** = 1]
48 ≤ ***d*** ≤ 50 [***a*** = 2]
d = 48, 49 [***a*** = 3]
d = 55, 56 [***a*** = 4]
1 ≤ ***k*** ≤ 6

[Default] ***d1...dk*** = "9600" [***a*** = 1]
d = 48 [***a*** = 2]
d = 48 [***a*** = 3]
d = 56 [***a*** = 4]

[Description] Changes the condition of the serial interface defined by ***a***.

a	**Item**
1	Baud rate
2	Parity
3	Flow control
4	Bit length

- Baud rate (***a*** = 1) is specified by number.

Example: When defining 19200 bps: 5 bytes as "19200" (Hexadecimal = 31H, 39H, 32H, 30H, 30H / Decimal= 49, 57, 50, 48, 48)

- Parity (***a*** = 2) is specified by d as follows:

d	**Function**
48	Select no parity
49	Select odd parity
50	Select even parity

- Flow control (***a*** = 3) is specified by d as follows:

d	**Function**
48	Select Flow control of DTR/DSR
49	Select Flow control of XON/XOFF

- Bit length (***a*** = 4) is specified by d as follows:

d	**Function**
55	Select 7 bits length
56	Select 8 bits length

[Notes]
- It is recommended that the DIP Switch be used to change communication condition.
  - If the communication control between host and printer does not correspond, the printer cannot process data from the host normally, and the host cannot receive data from the printer normally.
- This function works in user setting mode.
- This function works with serial interface printers.
- The communication condition set by this function is enabled by executing Function 2 or restarting the printer. It is necessary to change the communication condition of the host to be the same as the printer to communicate with the printer.
- To enable the communication condition set by this function, set DSW 1-5 to "ON" (Interface condition selection).
  - The serial communication setting is also specified by DIP Switch.
  - 4 baud rates are selectable by this command.
    ["2400", "4800", "9600", "19200"]
  - Setting of this function can be changed by "Memory Switch setting mode" by the panel switch operation.

GS (E *pL pH fn a* <Function 12>

[Format]

ASCII	GS	(	E	***pL pH fn a***
Hex	1D	28	45	***pL pH 0B a***
Decimal	29	40	69	***pL pH 11 a***

[Range] (***pL*** + ***pH*** x 256) = 2 (***pL*** = 2, ***pH*** = 0)

fn = 12

1 ≤ ***a*** ≤ 4

[Description] Transmits the setting value of the serial interface communication condition specified by ***a***.

[Notes]
- This function works in user setting mode and during normal operation.
- This function transmits "Header to NUL" as follows:

a	Communication condition
1	Baud rate
2	Parity
3	Flow control
4	Bit length

[Notes]
- This function works in user setting mode and during normal operation.
- This function transmits "Header to NUL" as follows:

Transmit data	Hex	Decimal	Data
Header	37H	55	1 byte
Identifier	33H	51	1 byte
Communication condition (*1)	30H–34H	48–52	1 byte
Separator	1FH	31	1 byte
Setting value (*2)	30H–39H	48–57	1–5 bytes
NUL	00H	0	1 byte

(*1) Communication condition is specified by ***a***.

(*2) Setting value is set by Function 11.

- "Setting value" is set by Function 11. It might differ from the current communication condition before executing Function 2 or depending on the setting of the DIP Switch.
- This function is used to confirm whether Function 11 ends normally before executing Function 2.

GS I

[Name] Transmit printer ID

[Format]

ASCII	GS	I	***n***
Hex	1D	49	***n***
Decimal	29	73	***n***

[Range] 1 ≤ ***n*** ≤ 3, 49 ≤ ***n*** ≤ 51, 65 ≤ ***n*** ≤ 68, ***n*** = 33

[Default] None

[Description] Transmits 1 byte of printer ID which is specified by ***n*** as follows:

n	Printer ID	Specification
1, 49	Printer model ID	Printer model
2, 50	Type ID	Printer type
3, 51	Version ID	Firmware version

Transmits printer information A (common information), using ***n*** as follows:

n	Printer ID	Specification
33	Type information	Supported functions

Transmits printer information B (common information), using ***n*** as follows:

n	Printer ID	Specification
65	Firmware version	Firmware version
66	Maker name	KPS
67	Printer model	Printer model
68	Serial No	Serial No of the printer

[Notes]

- When you use this command, obey the following rules.
  - When the host PC transmits the function data, transmit next data after receiving the corresponding ID from the printer.
  - With a serial interface printer, be sure to use this function when the host can receive data.
  - With a parallel interface printer, data (printer ID, printer information) sent with this command is temporarily stored in the printer send buffer like other transmitted data (except ASB). When the host goes into reverse mode, the printer then sends the data sequentially from the beginning of the send buffer. When using this command, promptly change into reverse mode to start the data receive process.

[Notes for printer ID]

- Each printer ID is composed of 1 byte of data (when 1 ≤ ***n*** ≤ 3, 49 ≤ ***n*** ≤ 51).
- Printer model ID differs, depending on the printer model (when ***n*** = 1, 49).
- Transmits specified printer information, as follows:

Bit	Off/On	Hex	Decimal	Function
0	Off	00	0	Multi-byte character codes are not supported.
	On	01	1	Multi-byte character codes are supported.
1	Off	00	0	Autocutter not installed.
	On	02	2	Autocutter installed.
2	Off	00	0	DM-D (customer display) is not installed.
	On	04	4	DM-D (customer display) is installed.
3	-	-	-	Reserved.
4	Off	00	0	Not used. Fixed to Off.
5	-	-	-	Reserved.
6	Off	00	0	E/P (Endorse printer) not installed
7	Off	00	0	Not used. Fixed to Off.

- Printer ID is distinguished from other send data by bits 4 and 7. When the data sent from printer after printing **GS I** is "0xx0xxxx" (x = 0, 1), the printer processes the data as printer ID.

[Notes for printer information A]

• Printer information A (n = 33) consists of [Header ~ NUL] as shown in the following table:

Transmitted data	Hex	Decimal	Amount of data
Header	3DH	61	1 byte
Identifier(*1)	20H ~ 2FH	32 ~ 47	1 byte
Printer information A (*2)	Depends on printer model	Depends on printer model	0 ~ 80 bytes
NUL	00H	0	1 byte

(*1) The identifier is transmitted as the transmitted parameter n of this command.
Example: When type information is specified (***n*** = 33), the identifier is [hex = 21H/decimal = 33].
(*2) If the printer information cannot be transmitted, the printer transmits 3-byte code of [Header +Identifier + NUL].

The printer information A of type information (***n*** = 33) is 2 bytes of data as shown in the following tables.

Bit	Off/On	Hex	Decimal	Function
0	Off	00	0	Multi-byte character codes are not supported.
	On	01	1	Multi-byte character codes are supported.
1	Off	00	0	Autocutter not installed.
	On	02	2	Autocutter installed.
2	Off	00	0	DM-D (customer display) is not installed.
	On	04	4	DM-D (customer display) is installed.
3-5	-	-	-	Reserved.
6	On	40	64	Fixed.
7	Off	00	0	Fixed.

• During transmission of [Header ~ NUL], ASB status and real time commands are disabled.
• When communication with the printer uses XON/XOFF control, the XOFF code may interrupt the "Header to NUL" data string.
• The printer information A can be differentiated by the header of the block data from other transmission data. After outputting **GS I**, if the data transmitted from the printer is [Hex = 3DH/Decimal = 61], data is processed up to NUL [Hex = 00H/Decimal = 0] as the data block, according to the header and identifier.

[Notes for printer information B]

• Each printer information is composed of [header + printer information + NUL] (when 65 ≤***n*** ≤68).

Send data	Hex	Decimal	Data
Header	5FH	95	1 byte
Printer information B	Depends on the model	Depends on the model	1-80 bytes
NUL	00H	0	1 byte

- If the printer information is not prepared, [Header + NUL] (2 bytes) are sent.

• The firmware version can be confirmed by self test printing. The self test is executed by executing GS (A,or by panel switch operation when power is turned on.
• When transmitting [Header to NUL], ASB status and real-time commands cannot be used.
• With serial interface, when communication with the printer uses XON/XOFF control, the XOFF code may interrupt the "Header to NUL" data string.
• Printer information can be identified to other transmission data according to specific data of the transmission data block. When the header transmitted by the printer is [hex = 5FH/decimal =95], treat NUL [hex = 00H/decimal =0] as a data group and identify it according to the following data.
• Printer model ID (***n*** = 1, 49)
Hex: 0DH / Decimal: 13
• Type ID (***n*** = 2, 50)
Bit 1: [Autocutter is installed/not installed] indicates the state of DIP Switch 1-3.
Bit 2: The bit [DM-D (Customer display) isn't supported.
• Printer model (n = 67)
Printer model: SRP-275
• Type information (n = 33)
Bit 1: [Autocutter is installed/not installed] indicates the state of DIP Switch 1-3.
Bit 2: The bit [DM-D (Customer display) isn't supported.

GS V

[Name] Select cut mode and cut paper

[Format]

Function A	ASCII	GS	V	***m***	
	Hex	1D	56	***m***	
	Decimal	29	86	***m***	
Function B	ASCII	GS	V	***m***	***n***
	Hex	1D	56	***m***	***n***
	Decimal	29	86	***m***	***n***

[Range] Function A ***m*** = 0, 1, 48, 49

Function B ***m*** = 65, 66; 0 ≤ ***n*** ≤ 255

[Default] None

[Description] Select a paper cutting mode using m and then cut the paper, as follows:

m		Function
<A>	0,48	Executes a full cut (cuts the paper completely).
	1,49	Executes a partial cut (one point left uncut).
<B>	65	Feeds paper to (cutting position + ***n*** × vertical motion unit) and executes a partial cut(one point left uncut).
	66	Feeds paper to (cutting position + ***n*** × vertical motion unit) and executes a partial cut(one point left uncut).

[Note for <A>]
- If an auto cutter is not provided, this command is ignored.

[Notes for <B>]
- When n = 0, the printer feeds the paper to the cutting position and cuts it.
- If an auto cutter is not provided, the printer only feeds the paper for specified amount.
- Vertical motion unit is used for calculating a paper feed amount.

GS a

[Name] Enable/disable Automatic Status Back (ASB)

[Format]

ASCII	GS	a	***n***
Hex	1D	61	***n***
Decimal	29	97	***n***

[Range] 0 ≤ ***n*** ≤ 255

[Default] When DIP Switch or Memory Switch (BUSY condition) is Off: ***n*** = 0

When DIP Switch or Memory Switch (BUSY condition) is On: ***n*** = 2

[Description] Enables or disables basic ASB (Automatic Status Back) and specifies the status items to include, using n as follows:

Bit	Off/On	Hex	Decimal	Status for ASB
0	Off	00	0	Drawer kick-out connector pin 3 status disabled.
	On	01	1	Drawer kick-out connector pin 3 status enabled.
1	Off	00	0	On-line/off-line disabled.
	On	02	2	On-line/off-line enabled
2	Off	00	0	Error status disabled.
	On	04	4	Error status enabled.
3	Off	00	0	Paper sensor status disabled.
	On	08	8	Paper sensor status enabled.
4	-	-	-	Undefined.
5	-	-	-	Undefined.
6	-	-	-	Undefined.
7	-	-	-	Undefined.

[Notes]

- ASB is the function that transmit the status of [cover open/close], [Online/Offline] from the printer automatically. It is called [ASB function] and the status is [ASB status]. If you use ASB, application can acquire the printer change in a real-time and passively.
- Select any status enabled (except ***n*** = 0) and basic ASB starts. Then transmit the current basic ASB status. After that, while ASB is active the selected enabled basic ASB status is transmitted whenever the status changes.
- When ***n*** = 0, basic ASB is disabled. When ASB is disabled, basic ASB status is not transmitted.
- Multiple status items can be selected.
- When ASB is active, ASB status is transmitted whenever the status changes even if **ESC =** is not selected.
- This command setting is effective until **ESC @** is executed, the printer is reset or power is turned off.
- During Block data [header - NUL] transmission, ASB is disabled temporarily. Therefore you cannot get the printer status change through ASB status when block data [header - NUL] is transmitted.
- Any basic ASB status represents the enabled status whenever the status changes. Therefore the disabled status items may change, because each status transmission represents the current status.
- The basic ASB statuses, corresponding to each bit for ***n*** are as follows:

n		**ASB status**	
Bit	**Function**	**Bit**	**Status**
0	Drawer kick-out connector status.	Bit 2 of the first byte	Drawer kick-out connector pin 3 status.
1	Online/offline status.	Bit 3 of the first byte	Online/ offline status.
		Bit 5 of the first byte	Cover status.
		Bit 6 of the first byte	Paper is being fed by paper feed button status.
		Bit 0 of the second byte	Waiting for online recovery status.
		Bit 0 and 1 of the third byte[Note]	Paper near end sensor status.
		Bit 2 and 3 of the third byte[Note]	Paper end sensor status.
2	Error status.	Bit 2 of the second byte	Mechanical error status.
		Bit 3 of the second byte	Autocutter error status.
		Bit 5 of the second byte	Unrecoverable error status.
		Bit 6 of the second byte	Automatically recoverable error status.
3	Paper sensor status.	Bits 0 and 1 of the third byte	Paper near end sensor status.
		Bits 2 and 3 of the third byte	Paper end sensor status.
6	Panel switch status.	Bit 1 of the second byte	Paper feed status

Note Only if **ESC 4** is selected or paper stop printing sensor is not selected.

• Basic ASB status is 4-byte configuration [first byte - fourth byte].
• The status to be transmitted are as follows:
• First byte (printer information)

Bit	Off/On	Hex	Decimal	Function
0	Off	00	0	Not used. Fixed to Off.
1	Off	00	0	Not used. Fixed to Off.
2	Off	00	0	Drawer kick-out connector pin 3 is LOW.
	On	04	4	Drawer kick-out connector pin 3 is HIGH.
3	Off	00	0	On-line.
	On	08	8	Off-line.
4	On	10	16	Not used. Fixed to On.
5	Off	00	0	Cover is close
	On	20	32	Cover is open
6	Off	00	0	Paper is not being fed by the paper feed button.
	On	40	64	Paper is being fed by the paper feed button.
7	Off	00	0	Not used. Fixed to Off.

• Second byte (printer information)

Bit	Off/On	Hex	Decimal	Function
0	Off	00	0	Not used. Fixed to Off.
1	Off	00	0	Not used. Fixed to Off.
2	Off	00	0	No mechanical error.
	On	04	4	Mechanical error.
3	Off	00	0	No auto cutter error.
	On	08	8	Auto cutter error occurred.
4	Off	00	0	Not used. Fixed to Off.
5	Off	00	0	No unrecoverable error.
	On	20	32	Unrecoverable error.
6	Off	00	0	No automatically recoverable error.
	On	40	64	Automatically recoverable error occurred.
7	Off	00	0	Not used. Fixed to Off.

- If mechanical error (bit 2) or auto-cutter error (bit 3) occurs due to paper jams or the like, it is possible to recover by correcting a cause of the error and executing DLE ENQ.
- If an unrecoverable error (bit 5) occurs, turn off the power as soon as possible.

• Third byte (paper sensor information)

Bit	Off/On	Hex	Decimal	Function
0,1	Off	00	0	Paper near end sensor: paper adequate.
	On	03	3	Paper near end sensor: paper near end.
2,3	Off	00	0	Paper end sensor: paper present.
	On	0C	12	Paper end sensor: no paper present.
4	Off	00	0	Not used. Fixed to Off.
5	Off	00	0	Not used. Fixed to Off.
6	Off	00	0	Not used. Fixed to Off.
7	Off	00	0	Not used. Fixed to Off.

- Some paper sensors are not present, depending on the printer model.The names of some paper sensors are different, depending on the printer model.

Bit	Off/On	Hex	Decimal	Function
0	On	01	1	Not used. Fixed to On.
1	On	02	2	Not used. Fixed to On.
2	On	04	4	Not used. Fixed to On.
3	On	08	8	Not used. Fixed to On.
4	Off	00	0	Not used. Fixed to Off.
5	Off	00	0	Not used. Fixed to Off.
6	Off	00	0	Not used. Fixed to Off.
7	Off	00	0	Not used. Fixed to Off.

GS r

[Name] Transmit status

[Format]

ASCII	GS	r	***n***
Hex	1D	72	***n***
Decimal	29	114	***n***

[Range] ***n*** = 1, 2, 49, 50

[Description] Transmits 1 byte of status data using ***n*** as follows:

n	Function
1, 49	Transmits paper sensor status
2, 50	Transmits drawer kick-out connector status

[Notes]

- Each status is 1 byte.
- The status to be transmitted is as follows:
  - Paper sensor status (***n*** = 1, 49)

Bit	Binary	Hex	Decimal	Status
0, 1	00	00	0	Paper near end sensor: paper adequate.
	11	03	3	Paper near end sensor: paper not present.
2, 3	00	00	0	Paper end sensor: paper present.
	11	0C	12	Paper end sensor: paper not present.
4	0	00	0	Not used. Fixed to Off.
5,6	-	-	-	Undefined.
7	0	00	0	Not used. Fixed to Off.

- The status to be transmitted is as follows:
  - Drawer kick-out connector status (***n*** = 2, 50)

Bit	Binary	Hex	Decimal	Status
0	0	00	0	Drawer kick-out connector pin 3 is LOW.
	1	01	1	Drawer kick-out connector pin 3 is HIGH.
1-3	-	-	-	Undefined.
4	0	00	0	Not used. Fixed to Off.
5,6				Undefined
7	0	00	0	Not used. Fixed to Off.

- When you use this command, obey the following rules.
  - After the host PC transmits the function data, the printer will send response data or status data back to the PC. Do not transmit more data from the PC until the response data or status data are received from the printer.
  - When operating with a serial interface, be sure to configure operation so that the host computer uses the printer only when it is READY.
  - With a parallel interface, a real-time status is stored in the transmission buffer of the printer temporarily the same as the other transmission data (except for ASB status), and when the host enters reverse mode, data is transmitted in order from the beginning of the transmission buffer. When using this command, the host should be changed to the reverse mode immediately and execute a receive processing of status.

4-4-2 STAR mode (SP500) Details

ESC GS t *n*

[Name] Select code page

[Format]

ASCII	ESC	GS	t	***n***
Hex	1B	1D	74	***n***
Decimal	27	29	116	***n***

[Range] 0 ≤ ***n*** ≤ 30

[Default] Memory Switch setting

[Description] Specifies code page according to ***n*** value.

n	Page
0	Page 0 (PC437 : U.S.A.)
1	Page 1 (Katakana)
2	Page 2 (PC850 : Multilingual)
3	Page 3 (PC860 : Portuguese)
4	Page 4 (PC863 : Canadian-French)
5	Page 5 (PC865 : Nordic)
16	Page 16 (WPC1252 : Latin1)
17	Page 17 (PC866 : Russian)
18	Page 18 (PC852 : Latin2)
19	Page 19 (PC858 : Euro)
21	Page 21 (PC862 : Israel)
22	Page 22 (PC864 : Arabic)
23	Page 23 (Thai character code 42)
24	Page 24 (WPC1253 : Greek)
25	Page 25 (WPC1254 : Turkish)
26	Page 26 (WPC1257 : Baltic)
27	Page 27 (Farsi) (*1)
28	Page 28 (WPC1251 : Russian) (*1)
29	Page 29 (PC737 : Greek) (*1)
30	Page 30 (PC775 : Baltic) (*1)
31	Page 31 (Thai character code 16)
32	Page 32 (OldCode : Israel)
33	Page 33 (WPC1255 : Israel)
34	Page 34 (Thai character code 11)
35	Page 35 (Thai character code 18)

(*1) Only Font B available.

ESC R *n*

[Name] Specify international character set

[Format]

ASCII	ESC	R	***n***
Hex	1B	52	***n***
Decimal	27	82	***n***

[Range] 0 ≤ ***n*** ≤ 10

[Default] Memory Switch setting

[Description] Specifies international characters according to ***n*** value.

n	International characters
0	U.S.A
1	France
2	Germany
3	U.K.
4	Denmark I
5	Sweden
6	Italy
7	Spain I
8	Japan
9	Norway
10	Denmark II
11	PC-999

ESC / *n*

[Name] Specify/cancel slash zero

[Format]

ASCII	ESC	/	***n***
Hex	1B	2F	***n***
Decimal	27	47	***n***

[Range] ***n*** = 0, 1, 48, 49

[Default] Memory Switch setting

[Description] Specifies/cancels slash zero according to ***n*** value.

n	**Function**
0,48	Cancels slash zero
1,49	Specifies slash zero

ESC M

[Name] Specify 7 × 9 font (half dots) (default)

[Format]

ASCII	ESC	M
Hex	1B	4D
Decimal	27	77

[Range] ------

[Default] ------

[Description] Specifies 7 × 9 (half dots) fonts

ESC P

[Name] Specify 9 × 9 font (half dots)

[Format]

ASCII	ESC	P
Hex	1B	50
Decimal	27	80

[Range] ------

[Default] ------

[Description] Specifies 9 × 9 font (half dots) dot fonts.

ESC :

[Name] Specify 5 × 9 font (3P-1)

[Format]

ASCII	ESC	:
Hex	1B	3A
Decimal	27	58

[Range] ------

[Default] ------

[Description] Specifies 5 × 9 (3 pulse = 1) dot fonts.
This command is recommended not to use because print quality is not guaranteed.

ESC SP *n*

[Name] Specify character space

[Format]

ASCII	ESC	SP	***n***
Hex	1B	20	***n***
Decimal	27	32	***n***

[Range] 0 ≤ ***n*** ≤ 15

[Default] ***n*** = 1

[Description] Sets character right space in n half-dots.
When in double-wide printing, the right space is also double.

SO

[Name] Specify character space

[Format]

ASCII	SO
Hex	0E
Decimal	14

[Range] ------

[Default] Cancel double-wide expanded characters

[Description] Prints ANK characters and Chinese characters with characters expanded twice the normal width.
This command is equivalent to **ESC W *n*** (***n*** = 1).
This command is recommended not to apply to 5×9 (3 pulse = 1) dot fonts because print quality is not guaranteed.

DC4

[Name] Cancel double wide printing

[Format]

ASCII	DC4
Hex	14
Decimal	20

[Range] ------

[Default] Cancel double-wide expanded characters

[Description] Cancels expanded wide printing if the following commands specify expanded wide printing.
- Double wide printing specifying command (**SO**)
- Set/cancel double wide printing (**ESC W**)

This command is equivalent to **ESC W *n*** (***n*** = 0).

ESC W *n*

[Name] Specify/cancel expanded double-wide printing

[Format]

ASCII	ESC	W	***n***
Hex	1B	57	***n***
Decimal	27	87	***n***

[Range] ***n*** = 0, 1, 48, 49

[Default] ***n*** = 0 (Double wide printing cancelled)

[Description] Specifies/cancels double-wide expanded printing for ANK characters and Chinese characters, according to an ***n*** value.

n	**Function**
0, 48	Cancel double-wide printing
1, 49	Specify double-wide expanded printing

This command is recommended not to apply to 5×9 (3 pulse = 1) dot fonts because print quality is not guaranteed.

ESC h *n*

[Name] Specify/cancel expanded double-high printing

[Format]

ASCII	ESC	h	***n***
Hex	1B	68	***n***
Decimal	27	104	***n***

[Range] ***n*** = 0, 1, 48, 49

[Default] ***n*** = 0 (Double-high printing cancelled)

[Description] Specifies/cancels double-high expanded printing for ANK characters and Chinese characters, according to an ***n*** value.

n	**Function**
0, 48	Cancel printing expanded character height
1, 49	Specify double-high expanded printing

Double-high & wide expanded character printing is possible by combining the double-wide and double-high expanded character commands.
The line feed amount including the expanded double-high characters is twice the normal amount.
This command is recommended not to apply to 5×9 (3 pulse = 1) dot fonts because print quality is not guaranteed.

ESC E

[Name] Select emphasized printing

[Format]

ASCII	ESC	E
Hex	1B	45
Decimal	27	69

[Range] ------

[Default] Emphasized printing cancelled

[Description] Specifies emphasized printing for subsequent data.
When in emphasized printing, data is printed in two passes.

ESC F

[Name] Cancel emphasized printing

[Format]

ASCII	ESC	F
Hex	1B	46
Decimal	27	70

[Range] ------

[Default] Emphasized printing cancelled

[Description] Cancels emphasized printing for subsequent data.

ESC – *n*

[Name] Specify/cancel underline mode

[Format]

ASCII	ESC	-	***n***
Hex	1B	2D	***n***
Decimal	27	45	***n***

[Range] ***n*** = 0, 1, 48, 49

[Default] ***n*** = 0 (Underline cancelled)

[Description] Specifies underline according to the ***n*** value.

n	Function
0, 48	Cancel underline
1, 49	Specify underline

Underlines are applied to the dot of the character.
Underlines are not applied to horizontal tabs and to specified horizontal direction positions.
When double-wide expanded characters have been specified, the underline is also expanded, but if double-high expanded characters have been selected, the underline does not expand in the vertical direction. It remains a one-dot line.

ESC _ *n*

[Name] Specify/cancel upperline

[Format]

ASCII	ESC	_	***n***
Hex	1B	5F	***n***
Decimal	27	95	***n***

[Range] ***n*** = 0, 1, 48, 49

[Default] ***n*** = 0 (Upperline cancelled)

[Description] Specifies upperline according to the ***n*** value.

n	Function
0, 48	Cancel upperline
1, 49	Specify upperline

Upperlines are applied to the dot of the character.
Upperlines are not applied to horizontal tabs and to specified horizontal direction positions.
When double-wide expanded characters have been specified, the upperline is also expanded, but if double-high expanded characters have been selected, the upperline does not expand in the vertical direction. It remains a one-dot line.

ESC 4

[Name] Specify white/black inversion and red color printing

[Format]

ASCII	ESC	4
Hex	1B	34
Decimal	27	52

[Range] ------

[Default] White/black inversion cancelled/black color printing specified

[Description] The following shows the details of this command.

- Specifies white/black inverted printing
  Subsequent characters are printed, including the character pitch, with white and black inverted.
  Cautions when using this command:
  1) This command is enabled for ANK characters only. White/black is not inverted for Chinese characters and block graphic characters.
  2) Do not use when ANK fonts are set to 5×9 (3P=1).
     (Print quality is not guaranteed.)
- Specifies red color printing (Set DIP Switch 1-4 to "ON")
  Subsequent characters are printed in red. Red and black characters can be mixed on the same line.
  This command is enabled for all print data (ANK characters, Chinese characters and bit images).

ESC 5

[Name] Cancel white/black inversion/specify black color printing

[Format]

ASCII	ESC	4
Hex	1B	35
Decimal	27	53

[Range] ------

[Default] Cancel white/black inverted printing/specify black printing

[Description] The following shows the details of this command. They vary according to the model.

- Cancels white/black inverted printing
- Specifies black color printing

Cancels red color printing and prints subsequent data in black.

SI

[Name] Select upside-down printing

[Format]

ASCII	SI
Hex	0F
Decimal	15

[Range] ------

[Default] Upside-down printing cancelled

[Description] Specifies upside-down printing

This command is enabled only when at the top of the line. Therefore, upside down and right-side up characters cannot both exist in the same line.

This command is enabled for following.

- ANK characters
- Chinese characters
- Bit-Image

DC2

[Name] Cancel upside-down printing

[Format]

ASCII	DC2
Hex	12
Decimal	18

[Range] ------

[Default] Upside-down printing cancelled

[Description] Cancels upside-down printing

This command is enabled only when at the top of the line.

ESC RS i *n*

[Name] Specify/cancel character rotate mode

[Format]

ASCII	ESC	RS	i	***n***
Hex	1B	1E	69	***n***
Decimal	27	30	105	***n***

[Range] 0 ≤ ***n*** ≤ 2

48 ≤ ***n*** ≤ 50 ("0" ≤ ***n*** ≤ "2")

[Default] Character rotation cancelled (***n*** = 0)

[Description] Specifies direction to rotate print (clockwise) or to cancel rotation for subsequent data, according to the ***n*** value.

n	**Set rotation**
0, 48	Cancelled (0° rotation)
1, 49	270° rotation
2, 50	90° rotation

Rotated characters cannot be applied with underlines or upperlines.

The relationship between double-high and double-wide is reverse to when cancelled when rotating.

Cautions when character fonts

- Characters are printed using 7 x 9 fonts.
- Registered characters are printed using 7 x 9 font for download characters as well.
- Double height of character is not available when in character rotate mode.
- This command is recommended not to use because print quality is not guaranteed.

LF

[Name] Line feed

[Format]

ASCII	LF
Hex	0A
Decimal	10

[Range] ------

[Default] Set line feed to 1/6 inch

[Description] After printing data in the line buffer, paper is fed according to the currently set line feed amount.

CR

[Name] Carriage return (line feed)

[Format]

ASCII	CR
Hex	0D
Decimal	13

[Range] ------

[Default] Set line feed to 1/6 inch

[Description] Specifies the function according to the Memory Switch value.

MSW	**Function**
Condition 1	Ignored
Condition 2	Same as the **LF** code
Condition 3	Executes only printing, with no paper feed.

ESC a *n*

[Name]	Feed paper n lines			
[Format]	ASCII	ESC	a	***n***
	Hex	1B	61	***n***
	Decimal	27	97	***n***
[Range]	1 ≤ ***n*** ≤ 127			
[Default]	------			
[Description]	After printing data in the line buffer, paper is fed according to the currently set line feed amount × ***n***. Line feed amount is unaffected even if double-high characters and double-high/wide characters exist in the same line.			

ESC 0

[Name]	Set line feed to 1/8 inch		
[Format]	ASCII	ESC	0
	Hex	1B	30
	Decimal	27	48
[Range]	------		
[Default]	1/6 inch		
[Description]	Sets subsequent line feeds to 1/8 inch.		

ESC 1

[Name]	Set line feed to 7/72 inch		
[Format]	ASCII	ESC	1
	Hex	1B	31
	Decimal	27	49
[Range]	------		
[Default]	1/6 inch		
[Description]	Sets subsequent line feeds to 7/72 inch.		

ESC z 0

[Name]	Set line feed to 1/12 inch							
[Format]	ASCII	ESC	z	0	or	ESC	z	"0"
	Hex	1B	7A	00		1B	7A	30
	Decimal	27	122	0		27	122	48
[Range]	------							
[Default]	1/6 inch							
[Description]	Sets subsequent line feeds to 1/12 inch.							

ESC z 1

[Name]	Set line feed to 1/6 inch							
[Format]	ASCII	ESC	z	1	or	ESC	z	"1"
	Hex	1B	7A	01		1B	7A	31
	Decimal	27	122	1		27	122	49
[Range]	------							
[Default]	1/6 inch							
[Description]	Sets subsequent line feeds to 1/6 inch.							

ESC A *n*

[Name]	Define n/72 inch pitch line feed			
[Format]	ASCII	ESC	A	***n***
	Hex	1B	41	***n***
	Decimal	27	65	***n***
[Range]	0 ≤ ***n*** ≤ 85			
[Default]	***n*** = 12 (1/6 inch line feed)			
[Description]	Defines line feed amount for one line as ***n***/72 inch. To enable this code, **ESC 2** (line feed pitch setting) is required.			

ESC 2

[Name]	Set **ESC A** line feed pitch		
[Format]	ASCII	ESC	2
	Hex	1B	32
	Decimal	27	50
[Range]	------		
[Default]	------		
[Description]	Sets one line feed amount to the value defined by **ESC A** (***n***/72 inch pitch line feed definition). Line feed pitch is set to 1/6 inch if executing this command when **ESC A** (***n***/72 inch pitch line feed definition) is not set.		

ESC 3 *n*

[Name]	Set line feed to n/216 inch line feed pitch			
[Format]	ASCII	ESC	3	***n***
	Hex	1B	33	***n***
	Decimal	27	51	***n***
[Range]	0 ≤ ***n*** ≤ 255			
[Default]	***n*** = 36 (1/6 inch)			
[Description]	Sets subsequent line feed amounts to a value approximate to ***n***/216 inch. Because the minimum pitch for the paper feed mechanism is 1/144 of an inch, the setting value will be approximated according to the following equation. *INT (**n** × 2/3 + 0.5)/144 of an inch*			

ESC y *n*

[Name]	Set line feed to n/144 inch line feed pitch			
[Format]	ASCII	ESC	y	***n***
	Hex	1B	79	***n***
	Decimal	27	121	***n***
[Range]	0 ≤ ***n*** ≤ 255			
[Default]	***n*** = 24 (1/6 inch)			
[Description]	Sets subsequent line feed amounts to a ***n***/144 inch.			

ESC J *n*

[Name] Execute n/72 inch paper feed one time

[Format]

ASCII	ESC	J	***n***
Hex	1B	4A	***n***
Decimal	27	74	***n***

[Range] 1 ≤ ***n*** ≤ 255

[Default] ------

[Description] After printing data in the line buffer, paper is fed ***n***/72 of an inch in the paper feed direction. Line feed amount is unaffected even if double-high characters and double-high/wide characters exist in the same line.
The single line feed setting value is not changed by this command.

ESC I *n*

[Name] Execute n/144 inch paper feed one time

[Format]

ASCII	ESC	I	***n***
Hex	1B	49	***n***
Decimal	27	73	***n***

[Range] 1 ≤ ***n*** ≤ 255

[Default] ------

[Description] After printing data in the line buffer, paper is fed ***n***/144 of an inch in the paper feed direction. Line feed amount is unaffected even if double-high characters and double-high/wide characters exist in the same line.
The single line feed setting value is not changed by this command.

FF

[Name] Form feed

[Format]

ASCII	FF
Hex	0C
Decimal	12

[Range] ------

[Default] ------

[Description] This command performs the following operations after the printer prints the printing data in the line buffer.
Operations are set by the Memory Switch

MSW	Cutter model	Tear-bar model
Condition 1	Executes a form feed.	Executes a form feed.
Condition 2	Feeds paper to the cutting position and performs a full cut. (*1)	Paper is fed to the tear-bar position. (*2)
Condition 3	Executes a form feed.	Executes a form feed.
Condition 4	Feeds paper to the cutting position and performs a partial cut. (*1)	Paper is fed to the tear-bar position. (*2)

(*1) Paper feed to cutting position: Executes a 1 inch paper feed.
(*2) Paper feed to tear-bar position: Executes a 7/6 inch paper feed.
Refer to the explanations on Memory Switches in each of the printer's product specification manuals for details regarding Memory Switch settings.

ESC C *n*

[Name]	Set page length to n lines			
[Format]	ASCII	ESC	C	***n***
	Hex	1B	43	***n***
	Decimal	27	67	***n***
[Range]	1 ≤ ***n*** ≤ 255			
[Default]	1/6 inch × 42			

[Description] This command sets the length of one page to [currently set line feed amount x ***n***] lines
The current position is the top position of the page.
The page length set using this command is unaffected by changing the form feed amount later.
Moving to the top of the page is performed using the **FF** (form feed) command.
The page length setting becomes effective and the bottom margin setting value is cleared when the page length is set to a value below the current bottom margin setting.

ESC C NUL *n*

[Name]	Set page length to n inches				
[Format]	ASCII	ESC	C	NUL	***n***
	Hex	1B	43	00	***n***
	Decimal	27	67	0	***n***
[Range]	1 ≤ ***n*** ≤ 127				
[Default]	***n*** = 7				

[Description] This command sets the length of one page to n inches. The current position is the top position of the page.
The page length set using this command is unaffected even if the line feed amount is subsequently changed.
Moving to the top of the page is performed using the **FF** (form feed) command.
The page length setting becomes effective and the bottom margin setting value is cleared when the page length is set to a value below the current bottom margin setting.

VT

[Name]	Feed paper to vertical table position	
[Format]	ASCII	VT
	Hex	0B
	Decimal	11
[Range]	------	
[Default]	------	

[Description] This command performs paper feeds up to the next vertical tab position after the printer prints the data in the line buffer.
This command is ignored if there are no tabs set.
If a vertical tab is set, and the current position is the same as the vertical tab position, or if it is below that position, it feeds paper to the top of the next page.

ESC B *n1 n2...nk* NUL

[Name]	Set vertical tab					
[Format]	ASCII	ESC	B	***n1***	***n2 ... nk***	NUL
	Hex	1B	0B	***n1***	***n2 ... nk***	00
	Decimal	27	11	***n1***	***n2 ... nk***	0

[Range] 1 ≤ ***n*** ≤ 255
1 ≤ ***k*** ≤ 16

[Default] (Not set)

[Description] Sets the vertical tab to the (current form feed amount × ***n***) position.
All other vertical tabs set before setting the vertical tab using this command are cancelled
A maximum of 16 vertical tabs can be set. However, the tab position must satisfy the condition of 1 ≤ ***n1*** ≤ ***n2... ≤ nk***. When receiving the illegal codes that do not satisfy the condition, tabs up to the illegal code are set, but those after the illegal code are discarded up to the NUL code so illegal code tab are not set.
The vertical tab set using this command is unaffected by changing the form feed amount later.
All vertical tabs are cleared by inputting **ESC B NUL**.
When set, this is unaffected by double-high and double-high/wide character settings.

ESC N *n*

[Name]	Set bottom margin to n lines			
[Format]	ASCII	ESC	N	***n***
	Hex	1B	4E	***n***
	Decimal	27	78	***n***

[Range] 0 ≤ ***n*** ≤ 255

[Default] ***n*** = 0

[Description] This command sets the bottom margin position to (current line feed amount × ***n***).

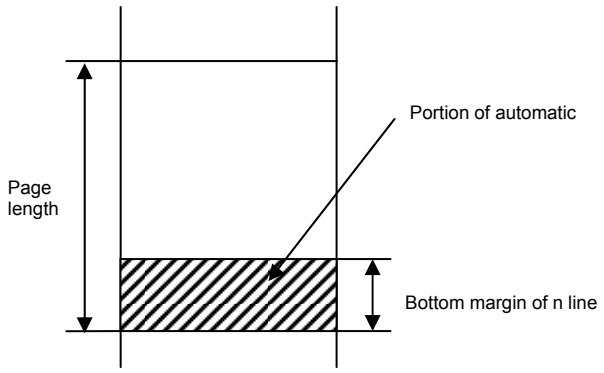

The current position when setting is effective from the next page when within the bottom margin.
The bottom margin set using this command is unaffected by changing the form feed amount.
The set bottom margin is cleared using the **ESC N NUL** or the **ESC O** command.
The bottom margin must be a value smaller than that for the length of one page. If it is higher than the length of one page, the setting is ignored.
Bottom margin of n line Portion of automatic paper feed.

ESC O

[Name]	Cancel bottom margin		
[Format]	ASCII	ESC	O
	Hex	1B	4F
	Decimal	27	79
[Range]	------		
[Default]	(Not set)		
[Description]	This command clears the bottom margin set using the ESC N (set bottom margin to n lines).		

ESC l *n*

[Name]	Set left margin			
[Format]	ASCII	ESC	l	***n***
	Hex	1B	6C	***n***
	Decimal	27	108	***n***
[Range]	0 ≤ ***n*** ≤ (Right margin -2) ≤ 255			
[Default]	***n*** = 0			

[Description] This command sets the left margin (current ANK character pitch × ***n***) using the left edge as a reference after printing data in the line buffer. Upside-down printing uses the same left edge as a reference.

Setting this command partway will print the data in the line buffer at that point and perform a line feed. It will take affect from the next line.

Character spacing is included in the character pitch but is unaffected by expansion settings.

The left margin set using this command is unaffected by changing the character pitch after being set.

The left margin must be at least a minimum of 18 dots with the right margin (*1). If the printable region as set by the left and right margins is smaller than one character, including the space between characters, printing is not possible.

(*1) More than 4 characters of 7 x 9 fonts, and more than 3 characters in 9 x 9 fonts (when character space = 0).

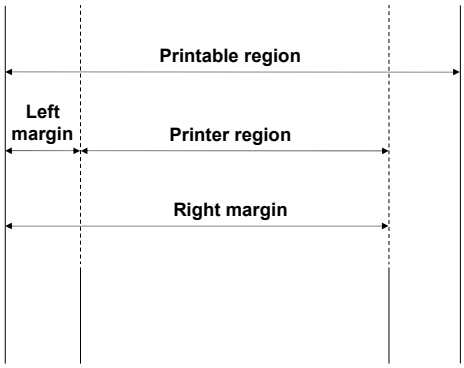

ESC Q *n*

[Name] Set right margin

[Format]

ASCII	ESC	Q	***n***
Hex	1B	51	***n***
Decimal	27	81	***n***

[Range] 2 ≤ ***n*** ≤ Maximum printable digits ≤ 255

[Default] Maximum printable digits

[Description] This command sets the printable region (current ANK character pitch × ***n***) using the left edge as a reference after printing data in the line buffer. Upside-down printing uses the same left edge as a reference.

Setting this command partway will print the data in the line buffer at that point and perform a line feed. It will take affect from the next line.

Character spacing is included in the character pitch but is unaffected by expansion settings.

The right margin set using this command is unaffected by changing the character pitch.

The printable region within the defined range must be at least a minimum of 18 dots for the right margin (*1). If the printable region as set by the left and right margins is smaller than one character, including the space between characters, printing is not possible.

(*1) More than 4 characters of 7 x 9 fonts, and more than 3 characters in 7 x 9 fonts (when character space = 0).

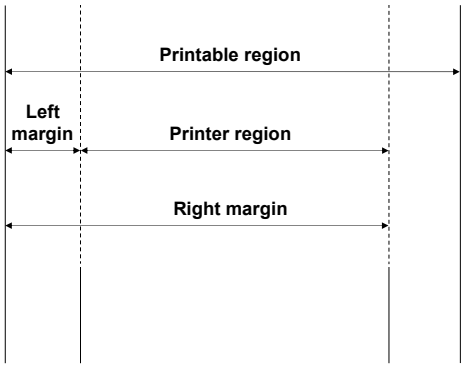

HT

[Name] Move horizontal tab

[Format]

ASCII	HT
Hex	09
Decimal	9

[Range] ------

[Default] ------

[Description] Move print position to next horizontal tab position.

The current moves to the next tab position when at the horizontal tab position.

This command is ignored with under the following conditions.

- When there is no horizontal tab set:
- When the current position is the same as the furthest right horizontal tab position or to the right of it.

In the underline/upperline modes, underlines and upperlines are not printed in the spaces created by a horizontal tab.

ESC D *n1 n2...nk* NUL

[Name] Set horizontal tab

[Format]

ASCII	ESC	D	***n1***	***n2 ... nk***	NUL
Hex	1B	44	***n1***	***n2 ... nk***	00
Decimal	27	68	***n1***	***n2 ... nk***	0

[Range] 1 ≤ ***n*** ≤ Maximum printable digits ≤ 255
0 ≤ ***k*** ≤ 16

[Default] (Not set)

[Description] Uses the left edge as a standard to set the horizontal tab to the position of (current ANK character pitch × ***n***).
The horizontal tab reference point is the left edge of the paper, regardless of the left margin.
When upside-down printing is specified, the right side becomes the reference.
ANK character pitches, including right spaces, are unaffected by expansion settings.
All other horizontal tabs set before setting the horizontal tab using this command are cancelled
A maximum of 16 horizontal tabs can be set, but the tab position must satisfy the following conditions.
If the following conditions are not met, data up to the NUL code is discarded. Normal tabs that meet the conditions below are set and tabs after errors occur are not set.

- 1 ≤ ***n1*** ≤ ***n2...*** ≤ ***nk***
- ***nk*** ≤ Printable region

The horizontal tab set using this command is unaffected by changing the character pitch.
All horizontal tabs are cleared by inputting **ESC D NUL**.

ESC GS a *n*

[Name] Specify position alignment

[Format]

ASCII	ESC	GS	a	***n***
Hex	1B	1D	61	***n***
Decimal	27	29	97	***n***

[Range] 0≤ ***n***≤ 2
48 ≤ ***n*** ≤50 ("0" ≤ ***n*** ≤ "2")

[Default] ***n*** = 0

[Description] This specifies position alignment for all data in one line, in the set print region.

n	**Position alignment**
0, 48	Left alignment
1, 49	Center alignment
2, 50	Right alignment

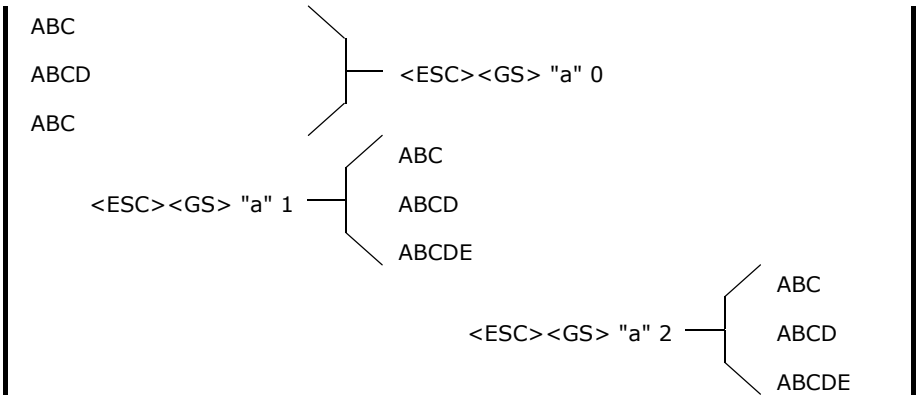

ESC GS A *n1 n2*

[Name]	Specify absolute position					
[Format]	ASCII	ESC	GS	A	***n1***	***n2***
	Hex	1B	1D	41	***n1***	***n2***
	Decimal	27	29	65	***n1***	***n2***
[Range]	0 ≤ ***n1*** ≤ 255					
	0 ≤ ***n2*** ≤ 255					
[Default]	------					

[Description] Moves the print position to the dot position based on the left margin (***n1*** + ***n2*** x 256).
When printing up-side down, the right margin is the reference. When the print area has been exceeded, this command is ignored. If print data is duplicated, the older print data is overwritten by new data (that older data being deleted in the process). However, bit image data is processed using OR for the old print data.

ESC GS R *n1 n2*

[Name]	Specify relative position					
[Format]	ASCII	ESC	GS	R	***n1***	***n2***
	Hex	1B	1D	52	***n1***	***n2***
	Decimal	27	29	82	***n1***	***n2***
[Range]	0 ≤ ***n1*** ≤ 255					
	0 ≤ ***n2*** ≤ 255					
[Default]	------					

[Description] Moves the print position to the dot position based on the left margin (***n1*** + ***n2*** x 256).
When the print area has been exceeded, this command is ignored.
If print data is duplicated, the older print data is overwritten by new data (that older data being deleted in the process). However, bit image data is processed using OR for the old print data.

ESC & NUL *n1 n2 [m d1 d2 d3 d4 d5 (d6 d7)] n2-n1+1*

[Name] Register/cancel download characters

[Format]

ASCII	ESC	&	NUL	***n1***	***n2***	***[m d1 d2 d3 d4 d5 (d6 d7)]n2-n1+1***
Hex	1B	26	00	***n1***	***n2***	***[m d1 d2 d3 d4 d5 (d6 d7)]n2-n1+1***
Decimal	27	38	0	***n1***	***n2***	***[m d1 d2 d3 d4 d5 (d6 d7)]n2-n1+1***

[Range] 32 ≤ ***n1*** ≤ ***n2*** ≤ 127 (20h ≤ ***n1*** ≤ ***n2*** ≤ 7Fh)
m = 0, 128 (00h, 80h)
0 ≤ ***d1~d7*** ≤ 255

[Default] ------

[Description] Registers download characters to the specified character code.
A maximum of 10 download characters of 7 x 9 font and 5 x 9 font can be registered. The range for writing download characters is specified by ***n1***, ***n2***. When the registered character is 1 character, ***n1*** = ***n2***. If one has been already registered to an address, it is overwritten.
This command registers download characters independent to each font.
m indicates the relationship of the character pattern and the print head (see figure below).
Definition data (***d1*** to d7) set the bits that correspond to the dots to print to 1, and the bits that correspond to the dots that are not printed to 0.
Even if **ESC @** (command initialization) is executed, a registered download character is not cleared.

1) When m = 0(00h):

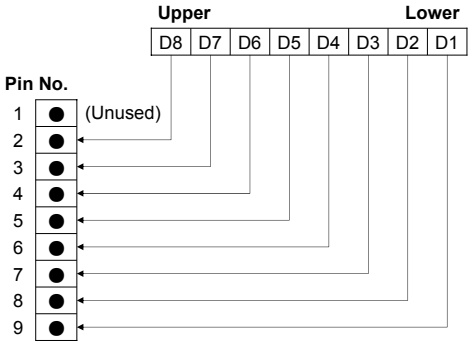

2) When m = 128 (80h):

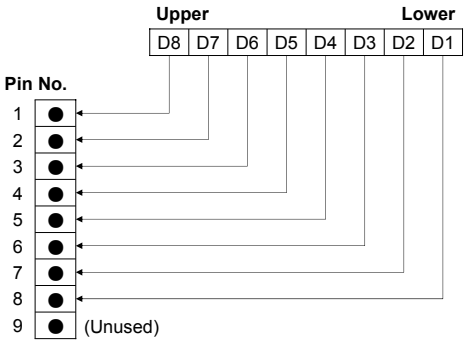

ESC % *n*

[Name] Set/cancel download characters

[Format]

ASCII	ESC	%	***n***
Hex	1B	25	***n***
Decimal	27	37	***n***

[Range] ***n*** = 0, 1, 48, 49

[Default] Download character cancelled

[Description] Specifies/cancels download character according to ***n*** value.

n	**Function**
0, 48	Cancel download characters
1, 49	Specify download characters

<Print example of download characters>
1) Download character register (**ESC & NUL *n1 n2 m0 m1 m2…***)
2) Specify download characters (**ESC % *n*** (***n*** = 1))
3) Print download characters

ESC K *n* NUL *d1 d2...dn*

[Name]	Standard density bit image						
[Format]	ASCII	ESC	K	***n***	NUL	***d1***	***d2 ... dn***
	Hex	1B	4B	***n***	00	***d1***	***d2 ... dn***
	Decimal	27	75	***n***	0	***d1***	***d2 ... dn***

[Range] 1 ≤ ***n*** ≤ Total dot count(200 dots)
0 ≤ ***d*** ≤ 255

[Default] ------

[Description] This command prints bit images with only the data count determined by ***n***.
The amount of data that can be printed in one line is limited to the total dot count. Data that exceeds the total dot count or the right margin is ignored. See each printer's product specifications manual for details regarding the total dot count.
After printing this bit image, it automatically returns to the character mode.

The following drawing shows the relationship of the print head needle wires and the data.

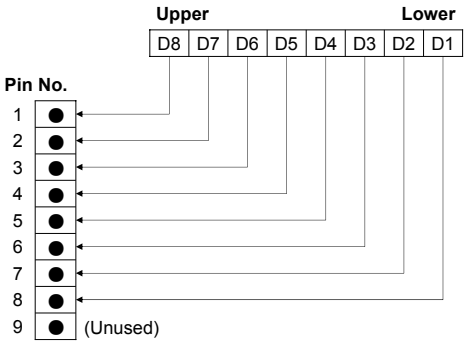

ESC L *n1 n2 d1 d2...dk*

[Name]	Double density bit image						
[Format]	ASCII	ESC	L	***n1***	***n2***	***d1***	***d2 ... dk***
	Hex	1B	4C	***n1***	***n2***	***d1***	***d2 ... dk***
	Decimal	27	76	***n1***	***n2***	***d1***	***d2 ... dk***

[Range] 1 ≤ (***n1*** + ***n2*** x 256) ≤ Total half dot count(400 half dots)
k = ***n1*** + ***n2*** x 256
0 ≤ ***d*** ≤ 255

[Default] ------

[Description] This command executes double-density (half-dot prints) bit images with only the data count determined by ***n1*** and ***n2***.
The amount of data that can be printed in one line is limited to the total half-dot count. Data that exceeds the total half-dot count or the right margin is ignored. The relationship of the print head needle wires and the data is the same as **ESC K** (Standard density bit image).
When printing double-density bit images, dots adjacent in the horizontal direction do not print.
After printing the bit image, it automatically returns to the character mode.

ESC d *n*

[Name] Paper cut instruction

[Format]

ASCII	ESC	d	***n***
Hex	1B	4C	***n***
Decimal	27	64	***n***

[Range] 0 ≤ ***n*** ≤ 3
48 ≤ ***n*** ≤ 51 ("0" ≤ ***n*** ≤ "3")

[Default] ------

[Description] This command executes the auto-cut according to the n specification, after printing data in the line buffer. After auto-cutter is executed, the printer considers that position to be the top of the page.

Auto cutter n	Auto cutter
0, 48	Partial cut at the current position. This command is ignored on tear-bar models.
1, 49	Partial cut at the current position. This command is ignored on tear-bar models.
2, 50	Paper is fed to cutting position, then a Partial cut is executed. On tear-bar models, paper is fed to the tear-bar position.
3, 51	Paper is fed to cutting position, then a partial cut is executed. On tear-bar models, paper is fed to the tear-bar position.

ESC BEL *n1 n2*

[Name] Set external drive device 1 pulse width

[Format]

ASCII	ESC	BEL	***n1*** ***n2***
Hex	1B	07	***n1*** ***n2***
Decimal	27	7	***n1*** ***n2***

[Range] 1 ≤ ***n1*** ≤ 127
1 ≤ ***n2*** ≤ 127

[Default] ***n1*** = 20 (Energizing time: 200 msec)
n2 = 20 (Delay time: 200 msec)

[Description] Sets the energizing and delay times for drive of the external device (such as cash drawers).

- Energizing time = 10 × ***n1*** (ms)
- Delay time = 10 × ***n2*** (ms)

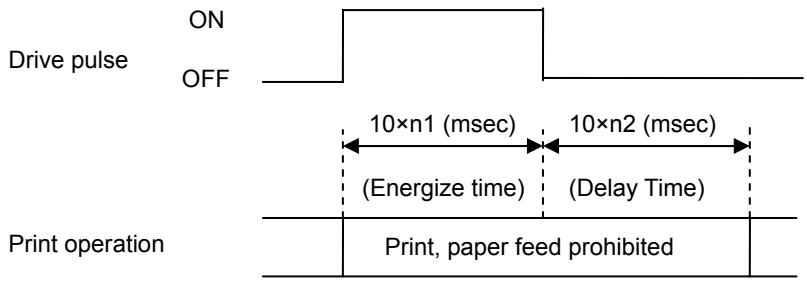

After printing, this is executed by **BEL** (External device 1 drive instruction) or **FS** (External device 1 drive instruction (real time)). This command is ignored when ***n1*** and ***n2*** are out of range.

- ***n1*** = 0 or ***n***2 = 0: This command is ignored.
- When ***n1*** > 128: ***n1*** = 128. When ***n2*** > 128, ***n2*** = 128.

BEL

[Name]	External device 1 drive instruction	
[Format]	ASCII	BEL
	Hex	07
	Decimal	7
[Range]	------	
[Description]	Executes the external device drive conditions set according to the ESC BEL (external device drive pulse width setting command). As with other commands, this command temporarily stores data in the data buffer, then executes in the order received.	
[Note]	External device 1 and external device 2 cannot be executed simultaneously.	

FS

[Name]	External device 1 drive instruction (real time)	
[Format]	ASCII	FS
	Hex	1C
	Decimal	28
[Range]	------	
[Default]	------	
[Description]	Executes the external device drive conditions set according to the ESC BEL (external device drive pulse width setting command). The printer executes this command immediately upon reception.	
[Note]	External device 1 and external device 2 cannot be executed simultaneously.	

SUB

[Name]	External device 2 drive instruction (real time)	
[Format]	ASCII	SUB
	Hex	1A
	Decimal	26
[Range]	------	
[Default]	------	
[Description]	Drives external device 2. The energizing time and delay time are fixed at 200 ms each. The printer executes this command immediately upon reception. This command is the same as the EM command.	
[Note]	External device 1 and external device 2 cannot be executed simultaneously.	

EM

[Name]	External device 2 drive instruction (real time)	
[Format]	ASCII	EM
	Hex	19
	Decimal	25
[Range]	------	
[Default]	------	
[Description]	Drives external device 2. The energizing time and delay time are fixed at 200 ms each. The printer executes this command immediately upon reception. This command is the same as the **SUB** command.	
[Note]	External device 1 and external device 2 cannot be executed simultaneously.	

ENQ

[Name] Inquire ENQ status

[Format] ASCII ENQ
Hex 05
Decimal 5

[Range] ------

[Default] ------

[Description] This command is effective only when using an interface capable of bi-directional data communications.
When this command is received, the printer sends the **ENQ** status in real time to the host (not taking it from the reception buffer, but executing it immediately upon reception from the host). Bi-directional parallel interfaces enter a "data present" state.

Bit	Contents	Status	
		"0"	"1"
7	Drawer kick-out connector status	OPEN	CLOSE
6	Buffer overflow	No error	Overflow
5	Reception Buffer Empty	Has Data	Empty
4	Fixed at "0"		-
3	Paper end	Paper	No paper
2	Mechanical error	No error	Error
1	Framing error	No error	Error
0	Parity error	No error	Error

EOT

[Name] Inquire EOT status

[Format] ASCII EOT
Hex 04
Decimal 4

[Range] ------

[Default] ------

[Description] This command is effective only when using an interface capable of bi-directional data communications.
When this command is received, the printer sends the EOT status in real time to the host (not taking it from the reception buffer, but executing it immediately upon reception from the host). Bi-directional parallel interfaces enter a "data present" state.

Bit	Contents	Status	
		"0"	"1"
7			
6			
5			
4	Fixed at "1"		-
3	Paper end	Paper	No paper
2	Paper near end	No error	Error
1			
0	Fixed at "0"		-

ESC ACK SOH

[Name] Inquire status

[Format]

ASCII	ESC	ACK	SOH
Hex	1B	06	01
Decimal	27	6	1

[Range] ------

[Default] ------

[Description] This command is effective only when using an interface capable of bi-directional data communications. When this command is received, the printer sends the status in real time to the host (not taking it from the reception buffer, but executing it immediately upon reception from the host). Bi-directional parallel interfaces enter a "data present" state. When in the serial interface DTR mode, and using a parallel interface, set so that the status can be inquired even when offline for errors, etc. When this command is sent once to the printer, do not send the next **ESC ACK SOH** command until the final auto status has been received.

[Note] Refer to following tables(Auto status)

● Auto status

< Header 1 (First byte) >

Bit	Contents	Status	
		"0"	"1"
7	Fixed at "0"		-
6	Reserved (Fixed at "0")		-
5	Printer status Byte count		checked
4	Fixed at "0"		-
3	Printer status Byte count		
2	Printer status Byte count		checked
1	Printer status Byte count		checked
0	Fixed at "0"	-	

Transmission byte count = 9 = 00100011B (23 Hex)

< Header 2 (Second byte) >

Bit	Contents	Status	
		"0"	"1"
7	Fixed at "0"		-
6	Version No.		-
5	Version No.		
4	Fixed at "0"		-
3	Version No.		
2	Version No.		checked
1	Version No.		checked
0	Fixed at "0"	-	

Version No.n = 3 = 00000110B (06 Hex)

< Printer status 1 Printer status (Third byte) >

Bit	Contents	Status	
		"0"	"1"
7	Fixed at "0"		
6	OFFLINE by switch input	No	Yes
5	Cover status	Close	Open
4	Fixed at "0"		-
3	ONLINE/OFFLINE status	ON-LINE	OFF-LINE
2	Drawer kick-out connector status	OPEN	CLOSE
1	<ETB> command	Not executed	Executed
0	Fixed at "0"	-	

< Printer status 2 Error information (Fourth byte) >

Bit	Contents	Status	
		"0"	"1"
7	Fixed at "0"		
6	Stopped by high head temperature	Not stopped	Stopped
5	Non-recoverable error	No error	Error
4	Fixed at "0"		
3	Auto-cutter error	No error	Error
2	Mechanical error	No error	Error
1	Not used (Fixed at "0")		
0	Fixed at "0"		

< Printer status 3 Error information (Fifth byte) >

Bit	Contents	Status	
		"0"	"1"
7	Fixed at "0"		
6	Buffer overflow	No error	Error
5	Not used (Fixed at "0")		
4	Fixed at "0"		
3	Not used (Fixed at "0")		
2	Not used (Fixed at "0")		
1	Not used (Fixed at "0")		
0	Fixed at "0"		

< Printer status 4 Sensor information (Sixth byte) >

Bit	Contents	Status	
		"0"	"1"
7	Fixed at "0"		
6	Not used (Fixed at "0")		
5	Not used (Fixed at "0")		
4	Fixed at "0"		
3	Paper end	Paper	No paper
2	Paper near end	Paper	No paper
1	Not used (Fixed at "0")		
0	Fixed at "0"		

< Printer status 5 Sensor information (Seventh byte) >

Bit	Contents	Status	
		"0"	"1"
7	Fixed at "0"		
6	Not used (Fixed at "0")		
5	Not used (Fixed at "0")		
4	Fixed at "0"		
3	Not used (Fixed at "0")	Paper	No paper
2	Not used (Fixed at "0")	Paper	No paper
1	Not used (Fixed at "0")		
0	Fixed at "0"		

< Printer status 6 Sensor information (Eight byte) >

Bit	Contents	Status	
		"0"	"1"
7	Fixed at "0"		
6	ETB counter (Bit 4)		
5	ETB counter (Bit 3)		
4	Fixed at "0"		
3	ETB counter (Bit 2)		
2	ETB counter (Bit 1)		
1	ETB counter (Bit 0)		
0	Fixed at "0"		

< Printer status 7 Sensor information (Ninth byte) >

Bit	Contents	Status	
		"0"	"1"
7	Fixed at "0"		
6	Not used (Fixed at "0")		
5	Not used (Fixed at "0")		
4	Fixed at "0"		
3	Not used (Fixed at "0")	Paper	No paper
2	Not used (Fixed at "0")	Paper	No paper
1	Not used (Fixed at "0")		
0	Fixed at "0"		

ESC RS a *n*

[Name] Sets auto status transmission conditions

[Format]

ASCII	ESC	RS	a	***n***
Hex	1B	1E	61	***n***
Decimal	27	30	97	***n***

[Range] 0 ≤ ***n*** ≤ 3

48 ≤ ***n*** ≤ 51 ("0" ≤ ***n*** ≤ "3")

[Default] DIP Switch or Memory Switch setting

[Description] This command is effective only when using an interface capable of bi-directional data communications.

Specification 1:

This command sets the auto status transmission conditions in the table below. The auto status transmission is sent once with this command.

Specification 2:

The function of this command is set by the Memory Switch.

Memory Switch Condition 1: Sets the auto status transmission in the table below.

Memory Switch Condition 2: Sends the auto status transmission once.

Auto status transmission conditions

n	**Status transmission conditions**
0, 48	Auto status invalid
1, 49	Auto status valid

ETB

[Name] Update **ETB** status (check after printing)

[Format]

ASCII	ETB
Hex	17
Decimal	23

[Description] This command is effective only when using an interface capable of bi-directional data communications.

Specification 1
This command waits until all printing is completed (the print motor is stopped), and after printing is completed, the auto status printer status 1-1 (**ETB** command) is set to "1" (**ETB** execution completed).
When print data remains in the line buffer when executing this command, this command is executed after that residual data is printed. The host checks that this bit has become 1 to recognize that the printing of the transmitted data has been completed.
The **ETB** status bit is cleared to 0 when returned to host.

The following shows the details of the processing with this command.
(1) Read out from the **ETB** command and reception buffer
(2) Wait for the printing of data to be completed before the **ETB** command
(3) After checking the end of printing, the auto status **ETB** status is set
(4) Auto status transmission (only when auto status is valid)

Specification 2
This command waits until all printing is completed (the print motor is stopped). After printing, auto status 1 – 1 (**ETB** command) is set to 1 (**ETB** execution completed) and the **ETB** counter is updated. When print data remains in the line buffer when executing this command, this command is executed after that residual data is printed. The host checks that this bit has become 1 to recognize that the printing of the transmitted data has been completed. The **ETB** status bit is cleared to 0 when returned to host. Also, **ETB** is applied to the end of one data block and batch transmits a multiple of blocks. By getting the next **ETB** counter, the end of the printing of the multiple of blocks is recognized to be completed. Note that zero clearing of the **ETB** counter is done by the ESC RS E command.

The following shows the details of the processing with this command.
1) Read out from the **ETB** command and reception buffer
2) Wait for the printing of data to be completed before the **ETB** command
3) After checking the end of printing, the auto status **ETB** status is set and the **ETB** counter is positively incremented.
4) Auto status transmission (only when auto status is valid)

ESC RS E *n*

[Name] Clear the **ETB** counter and **ETB** status 30 69 n

[Format]

ASCII	ESC	RS	E	***n***
Hex	1B	1E	45	***n***
Decimal	27	30	69	***n***

[Range] ***n*** = 0
n = 48 ("0")

[Default] ------

[Description] Clears the ASB **ETB** counter to zero and clears the auto status 1 – 1 **ETB** status.

CAN

[Name]	print data and initialize commands		
[Format]	ASCII	CAN	
	Hex	18	
	Decimal	24	
[Range]	------		
[Default]	------		
[Description]	When the reception buffer and line buffer are cleared, the set commands are initialized. Immediately executed not when taking out from the reception buffer, but when received from the host. DIP Switch is not reread. The following shows the specifications that are not initialized by this command. - **DC1** and **DC3** select/deselect status - **ESC BEL** external device drive conditions - Auto status valid/invalid conditions		

DC3

[Name]	Printer deselect	
[Format]	ASCII	DC3
	Hex	13
	Decimal	19
[Range]	------	
[Default]	Select printer	
[Description]	Deselects printer. All received data is discarded until the next **DC1** (printer select) is received.	

DC1

[Name]	Select printer	
[Format]	ASCII	DC1
	Hex	11
	Decimal	17
[Range]	------	
[Default]	Select printer	
[Description]	Cancels the deselect state of the **DC3** (printer deselect) and selects the printer.	

ESC @

[Name]	Command initialization		
[Format]	ASCII	ESC	@
	Hex	1B	40
	Decimal	27	64
[Range]	------		
[Default]	------		
[Description]	Initializes each command after printing data in the line buffer. DIP Switch is not reread. The following shows the specifications that are not initialized by this command. - **DC1** and **DC3** select/deselect status - **ESC BEL** external device drive conditions - Auto status valid/invalid conditions		

ESC U *n*

[Name] Select printing direction

[Format]

ASCII	ESC	U	***n***
Hex	1B	55	***n***
Decimal	27	85	***n***

[Range] 0 ≤ ***n*** ≤ 1

48 ≤ ***n*** ≤ 49 ("0" ≤ ***n*** ≤ "1")

[Description] Executes print direction specified by this command after printing data in the line buffer.

n	**Print direction**
0, 48	Specify bi-directional printing
1, 49	Specify uni-directional printing

ESC GS # *m N n1 n2 n3 n4* LF NUL

[Name] Set Memory Switch

[Format]

ASCII	ESC	GS	#	***m***	***N***	***n1***	***n2***	***n3***	***n4***	LF	NUL
Hex	1B	1D	23	***m***	***N***	***n1***	***n2***	***n3***	***n4***	0A	00
Decimal	27	29	35	***m***	***N***	***n1***	***n2***	***n3***	***n4***	0A	00

[Range] ***m*** = 87, 84, 44, 43, 45, 64 (***m*** = "W", "T", ",", "+", "-", "@")

48 ≤ ***n*** ≤ 57 ("0" ≤ ***n*** ≤ "9"), 65 ≤ ***n*** ≤ 70 ("A" ≤ ***n*** ≤ "F")

48 ≤ ***n1*** ≤ 57 ("0" ≤ ***n1*** ≤ "9"), 65 ≤ ***n1*** ≤ 70 ("A" ≤ ***n1*** ≤ "F")

48 ≤ ***n2*** ≤ 57 ("0" ≤ ***n2*** ≤ "9"), 65 ≤ ***n2*** ≤ 70 ("A" ≤ ***n2*** ≤ "F")

48 ≤ ***n3*** ≤ 57 ("0" ≤ ***n3*** ≤ "9"), 65 ≤ ***n3*** ≤ 70 ("A" ≤ ***n3*** ≤ "F")

48 ≤ ***n4*** ≤ 57 ("0" ≤ ***n4*** ≤ "9"), 65 ≤ ***n4*** ≤ 70 ("A" ≤ ***n4*** ≤ "F")

[Default] ------

[Description] After defining the Memory Switches using the definition commands determined in the Class item of the table below, the Memory Switches are set by sending this write command. The printer executes a reset automatically after writing the setting values defined by the write command to the non-volatile memory. Do not turn the printer power off while writing to the non-volatile memory. If it is turned off, the Memory Switch settings will be corrupted and the settings may return to initial values where the offset value settings are a digit off from all the Memory Switch settings. Consider the life of the non-volatile memory and avoid over-use of this command.

Functions	**Class**	**m**	**N**	**n1 n2 n3 n4**
Definition data (Data specification)	Definition	","	N	n1 n2 n3 n4
Definition data (Set specified bit)	Definition	"+"	N	n1 n2 n3 n4
Data definition (Clear specified bit)	Definition	"-"	N	n1 n2 n3 n4
Data definition (Initialize all data)	Definition	"@"	Fixed at "0"	Fixed at "0000"
Data definition write and reset	Definition	"W"	Fixed at "0"	Fixed at "0000"
Data definition write and reset and self print	Definition	"T"	Fixed at "0"	Fixed at "0000"

- ***m***: Mode selection
- ***N***: Memory Switch number to specify
- ***n1 n2 n3 n4***: Specify data ***m*** = "," → Specify data ***m*** = "+" → Bit number to set ***m*** = "-" → Bit number to clear

[Note] The status of this command varies according to the model, so check the special appendix.

ESC ? LF NUL

[Name] Reset printer and execute self print

[Format]

ASCII	ESC	?	LF	NUL
Hex	1B	3F	0A	00
Decimal	27	63	10	0

[Range] ------

[Default] ------

[Description] Hardware resets the printer and executes on self print. After sending this command, the next data should not be sent until the printer is online (in a state wherein it can receive data).

4-4-3 CITIZEN mode (iDP3550/3551) Details

FF *n* (CBM1 Mode)

[Name] n-line paper feed

[Format]

ASCII	FF	***n***
Hex	0C	***n***

[Range] 1 ≤ ***n*** ≤ 127

[Description] This command feeds the paper by n-lines. You can set ***n*** = 1 to 127 lines. If the print buffer contains the data, use of this command feeds the paper by n-lines after printing the data. Setting ***n*** = 0 does not feed the paper.

FF (CBM2 Mode)

[Name] Form feed

[Format]

ASCII	FF
Hex	0C

[Description] This command searches for the beginning of the next page after printing the data in the print buffer..

SO (CBM1 Mode)

[Name] Specifying the double width character

[Format]

ASCII	SO
Hex	0E

[Description] The data following this command is printed doubled in the horizontal direction. Double width characters remain valid until the double width character cancel command is entered, but they are also cancelled after they are printed one line. Note that the double width characters take up two ordinary characters worth of width.

SO (CBM2 Mode)

[Name] Specifying the double width character/shift-out side characters

[Format]

ASCII	SO
Hex	0E

[Description] The data following this command is printed doubled in the horizontal direction. Double width characters remain valid until the double width character cancel command is entered, but they are also cancelled after they are printed one line. Note that the double width characters take up two ordinary characters worth of width. In the case of a serial interface, if 7-bit data is selected, the shift-out side character is printed.

SI (CBM1 Mode)

[Name] Canceling the double width character

[Format]

ASCII	SI
Hex	0F

[Description] This command cancels the double width characters set with **SO**. The data following this command are printed in the ordinary character width.

SI (CBM2 Mode)

[Name] Canceling the double width character/Specifying the shift-in side characters

[Format] ASCII SI

Hex 0F

[Description] This command cancels the double width characters set with **SO**. The data following this command are printed in the ordinary character width. In the case of a serial interface, if 7-bit data is selected, the shift-in side character is printed.

LF

[Name] Printing and paper feed

[Format] ASCII LF

Hex 0A

[Description] If the print buffer contains the data, this command will feed the line after printing. If not, the command only feeds the line.

CR

[Name] Printing

[Format] ASCII CR

Hex 0D

[Description] This command prints the data. If the DIP Switch segment 1-8 is set to OFF, the printer will print the data in the print buffer and feed the paper by one line. If it is set to ON, the printer will print the data in the print buffer and will not feed the paper.

DC1 (CBM1 Mode)

[Name] Initializing the printer

[Format] ASCII DC1

Hex 11

[Description] This command initializes the printer.
The input buffer is not cleared.
The settings of the DIP Switch segments are not re-read.

DC1 (CBM2 Mode)

[Name] Setting the select mode

[Format] ASCII DC1

Hex 11

[Description] This command sets the printer in the selecting status.

DC2 (CBM1 Mode)

[Name] Specifying/Canceling the inverted character

[Format] ASCII DC2

Hex 12

[Description] This command selects/deselects the inverted characters. Enter this command at the beginning of one line. Otherwise, it is overridden. Erect and inverted characters cannot be mixed in one line.

DC2 (CBM2 Mode)

[Name] Specifying the red print

[Format] ASCII DC2

Hex 12

[Description] This command specifies red-color characters. All the characters in one line are printed in red by prefixing the print data with this command and sending it to the printer. When you want to use red characters, use this command for each line.

DC3 (CBM1 Mode)

[Name] Specifying the red print

[Format] ASCII DC3

Hex 13

[Description] This command specifies red-color characters. All the characters in one line are printed in red by prefixing the print data with this command and sending it to the printer. When you want to use red characters, use this command for each line.

DC3 (CBM2 Mode)

[Name] Setting the deselect character

[Format] ASCII DC3

Hex 13

[Description] This command sets the printer in the deselecting status in which the printer cannot receive data. To set the printer in the selecting status, use **DC1**.

CAN

[Name] Canceling the print data

[Format] ASCII CAN

Hex 18

[Description] This command clears the print data in the lines entered prior to this command.

ESC * *n1 n2*

[Name] Specifying the bit image mode

[Format]

ASCII	ESC	*	***n1***	***n2***
Hex	1B	2A	***n1***	***n2***

[Range] 1 ≤ ***n1*** + 256 X ***n2*** ≤ 360 (for DP654 mechanism)
1 ≤ ***n1*** + 256 X ***n2*** ≤ 400 (for DP657 mechanism)

[Description] This command allows printing in the bit image mode. Divide the number of dots printed by 256 and assume its quotient to be ***n2*** and remainder to be ***n1***. Therefore, the number of horizontal dots will be ***n1*** + 256 X ***n2***.
If the bit image data is entered beyond the dot positions printable in one line, the surplus data will be discarded. Normal data processing is restored after bit image printing. Printing is done in a single direction.

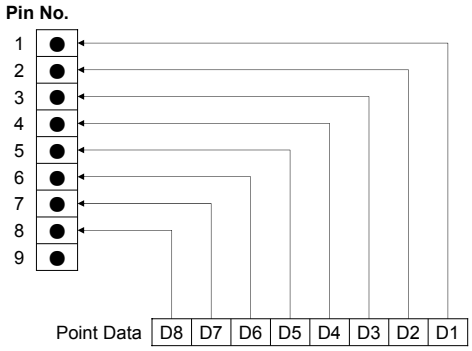

ESC - *n*

[Name] Specifying/Canceling the underline

[Format]

ASCII	ESC	-	***n***
Hex	1B	2D	***n***

[Default] ***n*** = 0

[Description] This command selects/deselects an underline. The underline is selected at ***n*** = 1 and deselected at ***n*** = 0.

ESC 1

[Name] Specifying the 1/9-inch line feed width

[Format]

ASCII	ESC	1
Hex	1B	31

[Description] Only effective for Graphic type. This command sets the line feed width to 1/9 inch.

ESC 2

[Name] Specifying the 2/9-inch line feed width

[Format]

ASCII	ESC	2
Hex	1B	32

[Description] Only effective for Graphic type. This command sets the line feed width to 2/9 inch.

ESC 3

[Name]	Specifying the standard line feed width		
[Format]	ASCII	ESC	3
	Hex	1B	33
[Description]	This command sets the line feed width as follows.		
	Character type : 1/6 inch		
	Graphic type : 2/9 inch		

ESC C *n*

[Name]	Setting the page length			
[Format]	ASCII	ESC	C	***n***
	Hex	1B	43	***n***
[Range]	1 ≤ ***n*** ≤ 127			
[Description]	Sets the 1-page length to n-lines.			

ESC N *n*

[Name]	Specifying the perforation skip			
[Format]	ASCII	ESC	N	***n***
	Hex	1B	4E	***n***
[Range]	1 ≤ ***n*** ≤ 126			
[Description]	This command feeds (skips) the lines specified with ***n*** without printing. However, you cannot specify beyond the length of one page.			

ESC O

[Name]	Canceling the perforation skip			
[Format]	ASCII	ESC	O	***n***
	Hex	1B	4F	***n***
[Description]	This command cancels perforation skipping operation.			

ESC C *n*

[Name]	Setting the page length			
[Format]	ASCII	ESC	C	***n***
	Hex	1B	43	***n***
[Range]	14 ≤ ***n*** ≤ 120			
[Description]	Sets the 1-page length to n-lines.			
	Also it intiates a paging operation, with 3 space lines placed at the beginning and end of a page.			
	(The first 3-line spacing is initiated when this command is verified.)			
[Notes]	If an out-of-range value is specified for "***n***", it is set to 66.			
	The actual number of printable lines is "***n-6***".			
[Default]	***n*** = 66			

ESC f <1>

[Name] Form feed (Changing the page)

[Format]

ASCII	ESC	f	<1>
Hex	1B	66	01

[Description] This command searches for the beginning of the next page after printing the data in the print buffer.

ESC t *n*

[Name] Selecting the character code table

[Format]

ASCll	ESC	t	***n***
Hex	18	74	***n***

[Range] 0 ≤ ***n*** ≤ 30

[Description] This command selects code-page.

[Default] Depends upon DIP Switch setting.

n	**Page**
0	Page 0 (PC437 : U.S.A.)
1	Page 1 (Katakana)
2	Page 2 (PC850 : Multilingual)
3	Page 3 (PC860 : Portuguese)
4	Page 4 (PC863 : Canadian-French)
5	Page 5 (PC865 : Nordic)
16	Page 16 (WPC1252 : Latin1)
17	Page 17 (PC866 : Russian)
18	Page 18 (PC852 : Latin2)
19	Page 19 (PC858 : Euro)
21	Page 21 (PC862 : Israel)
22	Page 22 (PC864 : Arabic)
23	Page 23 (Thai character code 42)
24	Page 24 (WPC1253 : Greek)
25	Page 25 (WPC1254 : Turkish)
26	Page 26 (WPC1257 : Baltic)
27	Page 27 (Farsi) (*1)
28	Page 28 (WPC1251 : Russian) (*1)
29	Page 29 (PC737 : Greek) (*1)
30	Page 30 (PC775 : Baltic) (*1)
31	Page 31 (Thai character code 16)
32	Page 32 (OldCode : Israel)
33	Page 33 (WPC1255 : Israel)
34	Page 34 (Thai character code 11)
35	Page 35 (Thai character code 18)

(*1) Only Font B available.

ESC BEL *n1 n2*

[Name] Setting the external device drive pulse width

[Format]

ASCII	ESC	BEL	***n1*** ***n2***
Hex	1B	07	***n1*** ***n2***

[Range] 1 ≤ ***n1***, ***n2*** ≤ 127

[Description] This command sets the power-on time to drive an external device (such as cash drawer).
Power-on time = ***n1*** x 10 (ms)
Delay time = ***n2*** x 10 (ms)
To actually drive the drawer, use the BEL and FS commands.

[Default] ***n1*** = ***n2*** = 20

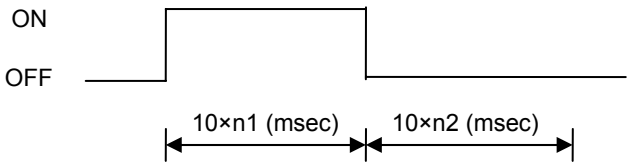

BEL

[Name] Driving command A for drawer-1
[Format] ASCII BEL
Hex 07
[Description] This command drives the drawer connector No. 2 pin under the condition set with the **ESC BEL *n1 n2*** command. This command is executed in order of entry into the input buffer.

FS

[Name] Driving command B for drawer-1
[Format] ASCII FS
Hex 1C
[Description] This command drives the drawer connector No. 2 pin under the condition set with the **ESC BEL *n1 n2*** command.

SUB

[Name] Driving command for drawer-2
[Format] ASCII SUB
Hex 1A
[Description] As soon as this command is received, the drawer connector No. 5 pin is driven. The power-on time is 200 ms ON and 200 ms OFF stationary. The drawers 1 and 2 cannot be driven simultaneously.

RS CBM1 Mode

[Name] Buzzer-on
[Format] ASCII RS
Hex 1E
[Description] This command emits a short warning sound from the printer.

RS CBM2 Mode

[Name] Double-width character print mode designation
[Format] ASCII RS
Hex 1E
[Description] All print data following RS code are printed out in double-width size and this code can be released by US code. It is possible to mix the characters in normal width and double width on one line However
Because a double-width character repuires twice the normal width, take care not to exceed the column capacity of the printer. When the input data become full to fill one line, the Full buffer print and one line feed will be automatically
carried out
RS code will be automatically cancelled after each line feed. The same function as RS is performed by SO code

ESC P <0>

[Name] Partial cut
[Format] ASCII ESC P *<0>*
Hex 1B 50 *00*
[Description] This command partially cuts the paper

ESC P <1>

[Name]	Partial cut			
[Format]	ASCII	ESC	P	<1>
	Hex	1B	50	01
[Description]	This command partially cuts the paper			

ESC R *n*

[Name]	Selecting the international character set			
[Format]	ASCII	ESC	R	***n***
	Hex	1B	52	***n***
[Range]	0 ≤ ***n*** ≤ 10			
[Description]	Selects a page ***n*** from the character code table.			

n	Character Set
0	U.S.A
1	France
2	Germany
3	U.K
4	Denmark I
5	Sweden
6	Italy
7	Spain
8	Japan
9	Norway
10	Denmark II
11	PC -999

ESC & <0> *n1 n2 [m0 m1 … m5 m6 m7 m8 m9] n2–n1+1*

[Name]	Defining the download character set				
[Format]	ASCII	ESC	&	*<0>*	***n1 n2 [m0 … m8 m9] n2-n1+1***
	Hex	1B	26	00	***n1 n2 [m0 … m8 m9] n2-n1+1***
[Range]	32 ≤ ***n1*** ≤ ***n2*** ≤255, ***m0*** = 0 or ***m0*** = 128				

[Description] This command defines he download characters. ***n1*** is a character code to start definition and ***n2*** is to end definition, respectively. When defining only one character, set ***n1*** = ***n2***. You can define the ASCII codes ranging from 32 to 255. Once the download characters are defined, they remain valid until they are redefined or the download deletion command (**ESC DC2 *n1 n2***) is executed.

When m0 = (80)H

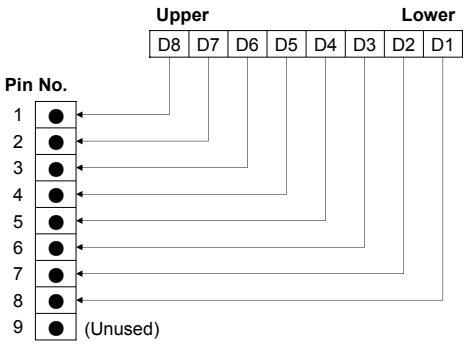

When m0 = (00)H

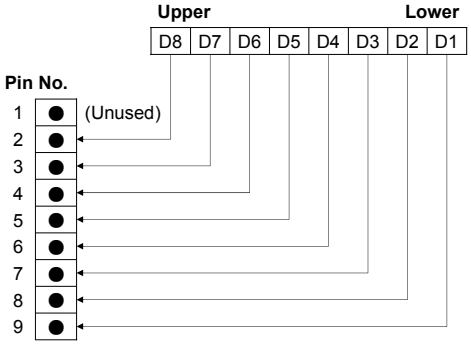

Horizontal adjacent dots cannot be printed.

ESC % *n*

[Name] Specifying/Canceling the download character set

[Format]

ASCII	ESC	%	***n***
Hex	1B	25	***n***

[Description] This command selects/deselects the download character set. The download characters cannot be printed by simply defining them with the above-mentioned **ESC & 0** command. To print them, send this command to the printer.

n	**Download Character Set**
0	Deselect
30	
1	Select
31	

ESC / *n* "data" CR or LF

[Name] Defining the message

[Format]

ASCII	ESC	/	***n***
Hex	1B	2F	***n***

[Range] 1 ≤ ***n*** ≤ 10

[Description] This command can define up to a 50-byte message in one line. If the value of n is specified beyond the range, the data following n will be treated as the print data. Once the message is defined, it remains valid until it is redefined. The data should end with **CR** (0DH) or **LF** (0AH). If the data exceeds 50 bytes, the subsequent data will be treated as the print data. Once the message is defined, it remains valid until it is redefined or the download deletion command (**ESC DC2 *n1 n2***) is executed.

ESC DC3 *n*

[Name] Printing the message

[Format]

ASCII	ESC	DC3	***n***
Hex	1B	13	***n***

[Range] 1 ≤ ***n*** ≤ 10

[Function] This command prints a message. If the value of ***n*** is specified beyond the range, the message will not be printed.

ESC y *n*

[Name] Setting the print lines after paper near end detection

[Format]

ASCll	ESC	y	***n***
Hex	1B	79	***n***

[Range] 0 ≤ ***n*** ≤ 255

[Description] This command sets the number of print lines after paper near end detection. It stops printing after printing ***n*** x 2 lines since detection of the paper near end, resulting in the paper near end state.

ESC DC2 *n1 n2*

[Name] Deleting the download character, message, bit image

[Format]

ASCII	ESC	DC2	***n1***	***n2***
Hex	1B	12	***n1***	***n2***

[Range]
0 ≤ ***n1*** ≤3
0 ≤ ***n2*** (Specify 0 at ***n1*** = 0)
(1 ≤ ***n2*** ≤ 10 at ***n1*** = 1)
(32 ≤ ***n2*** ≤ 255 at ***n1*** = 2)
(Specify 0 at ***n1*** = 3)

[Description] This command deletes the downloaded characters, message, and bit image.

n1	Object Deleted
0	All (Message, characters, bit image)
1	Download message
2	Download characters
3	Download bit image

With ***n2***, specify which data of the function specified with ***n1*** should be deleted.
n2 = 0 Deletes all the data saved with the download function specified with ***n1***.
n2 ≠ 0 Deletes the data downloaded at the value specified with ***n2*** (Value specified when saving with each download command), of the download function specified with ***n1***.

GS * *n1 n2 [d] n1 x n2 x 8*

[Name] Defining the download bit image

[Format]

ASCII	GS	*	***n1***	***n2***	***m***	***[d] n1 x n2 x 8***
Hex	1D	2A	***n1***	***n2***	***m***	***[d] n1 x n2 x 8***

[Range]
1 ≤ ***n1*** ≤ 45
0 ≤ ***n2*** ≤ 24
Note) Take care that the number of data (***n1*** x ***n2*** x 8) is equal to or smaller than 2,048.

[Description] This command defines the download bit image having the dots specified ***n1*** and ***n2***. The number of horizontal dots is represented by ***n1*** x 8 and that of vertical dots is represented by ***n2*** x 8, respectively. ***m*** denotes the number to be registered. (See a download bit image printout.) ***d*** denotes the bit image data. Once the download bit image is defined, it remains valid until it is redefined or the download deletion command (**ESC DC2 *n1 n2***) is executed.

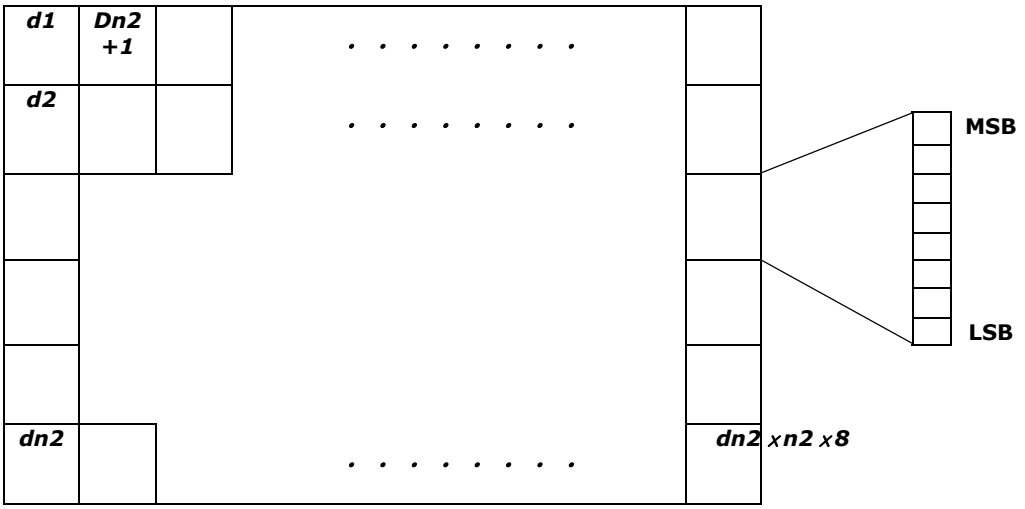

GS / *m*

[Name]	Printing the download bit image			
[Format]	ASCII	GS	/	***m***
	Hex	1D	2F	***m***
[Range]	0 ≤ ***m*** ≤255			
[Description]	This command prints the bit image saved in the number specified with ***m***.			
[Notes]	If the print buffer contains the data, this command will be ignored. If the bit image has not been saved in the specified number, this command will be ignored. Nothing is printed when m is other.			

US CBM2 mode

[Name]	Standard character print mode designation	
[Format]	ASCII	US
	Hex	1F
[Description]	This command cancels the double width characters set with **SO** or **RS,** The data following this command are printed in the ordinary character width. In the case of a serial interface, if 7-bit data is selected, the shift-in side character is printed.	